DCS Thyristor Power Converters
for DC Drive Systems
25 to 5150 A

Operating Instructions

DCS 600 MultiDrive

ABB Automation

How to use the DCS Documentation System

The matrix below indicates all available product documentation and its corresponding order numbers on its left columns as well as all existing DC Drive systems on its top rows. System descriptions, Technical data and Operating instructions (as far as they are available for the corresponding drive) are the basic documents and will be delivered together with each drive. All other documentation has to be ordered separately.

DC drive systems			System Drive								Standard Drive							Rebuild
			Cubicle				Module				Cubicle		Module					
Product documentation			DCV 700	DCA 600 MultiDrive	DCF 700/500	DCA 620 MultiDrive	DCS 500...11	DCS 600 MultiDrive	DCF 500	DCF 600 MultiDrive	DCS 500 enclosed	DCS 500B enclosed	DCS 400	DCS 500...21	DCS 500B	DCP 500	DCP 500B	DCR
System description	Language	Volume																
3ADW000049	EN, DE	II A									x			x				
3ADW000062	EN, DE	II B														x		
3ADW000066	EN, DE,FR	II D										x			x			
3ADW000069	EN, DE	II E															x	
3ADW000072	EN, DE	II F						x		x								
3ADW000121 ①	EN	II F1		x		x												
3ADW000095 (Manual) ②	EN,DE,FR,IT,SP	II K											x					
Technical Data	Language	Volume																
3ADW000054	EN, DE,FR	III					x	x	x	x				x	x	x	x	
Operating Instructions	Language	Volume																
3ADW000055	EN,DE,FR,SP	IV A									x	x		x	x	x	x	
3ADW000064	EN, DE	IV C			x				x									
3ADW000080	EN, DE	IV F		x		x		x		x								
3ADW000091 (Installation)	EN, DE	IV F1	x	x	x	x						x						
Software description	Language	Volume																
3ADW000056	EN	V A1									x			x		x		
3ADW000078	EN	V D1										x			x		x	
3ADW000076	EN	V F		x		x		x		x								
3ADW000050	EN	-	x				x											
3ADW000031 (Diagr.)	EN	-	x				x											
3ADW000053	EN	V C			x				x									
3ADW000052 (Diagr.)	EN	V C			x				x									
Tools	Language	Volume																
3AFE61178775 **CMT/DCS500**	EN	-									x	x		x	x	x	x	
EN 5926915-1 **GAD**	EN	-									x	x		x	x	x	x	
3ADW000048 (Application blocks)	EN	V A2									x	x		x	x	x	x	
3AFY61041486 **DDCTool**	EN	-	x		x		x		x		x	x		x	x	x	x	
3AFY61296123 **Drive *Window***	EN	-		x		x		x		x								
Service Instructions	Language	Volume																
3ADW000093	EN	VI A	x	x	x	x	x	x	x	x	x	x		x	x			
3ADW000131	EN	VI K											x					
Fieldbus	Language	Volume																
3ADW000086	EN	-										x			x		x	
3ADW000097	EN	-		x		x		x		x								
Others	Language	Volume																
3ADW000115 12-Pulse operation	EN	II F2		x				x										
3ADW000092 Rebuild manual	EN	II H	x	x	x	x	x	x	x	x	x	x		x	x			
3ADW000128 Paralleling DCS Conv.	EN	II H1		x				x				x			x			

available only for: DCS 500 / 500B / 600 drive systems

Status: 13.July.1999

① Covers information of Technical data

② Covers information of Technical data, Operating Instructions, Software Description

Thyristor Power Converters

Series
DCS 600 MultiDrive

25 to 5150 A

OPERATING INSTRUCTIONS

Code: 3ADW 000 080 R0501 Rev E

DCS6BAEE.DOC

EFFECTIVE: Dec. 18th, 2000
SUPERSEDES: Rev D - Dec. 3rd, 1999

©2000 ABB Automation Products GmbH. All rights reserved.

Safety Instructions

Overview

This chapter contains safety instructions which must be complied with during installation, operation and maintenance of the power converters series **DCS 600 MultiDrive**. If these instructions are not complied with, this may result in injuries (perhaps even with fatal) or in damage to the power converter, the motor and the driven machine. Before starting with any work whatsoever at or with this unit, you must read the information given in this chapter.

Warnings

Warnings provide information on states which if the specified procedure for the state concerned is not meticulously complied with may result in a serious error, in major damage to the unit, in injury to persons and even in death.
They are identified by the following symbols:

Danger: High Voltage! This symbol warns you of high voltages which may result in injuries to persons and/or damage to equipment. Where appropriate, the text printed adjacent to this symbol describes how risks of this kind may be avoided.

- All electrical installation and maintenance work on the thyristor power converter must be carried out by properly qualified staff who have been thoroughly trained in electrical engineering.
- The thyristor power converter and its adjacent units must be properly earthed by qualified professionals.
- You must NEVER perform any work on the thyristor power converter while it is still switched on. First switch the unit off, use a measuring instrument to make absolutely sure that the power converter has really been de-energized, and only then you may start with the work concerned.
- Due to external control circuits, there may be dangerously high voltages present at the thyristor power converter even after the line voltage has been switched off. So always work at the unit with appropriate caution! Non-compliance with these instructions may result in injury (or even death!).

General warning: this symbol warns you of non-electrical risks and dangers which may result in serious or even fatal injury to persons and/or in damage to equipment. Where appropriate, the text printed adjacent to this symbol describes how risks of this kind may be avoided.

- When thyristor power converters are in use, the electric motors, power transmission elements and the driven machines are working in an extended operating range, which means they have to cope with a relatively high loading.
- You should have made sure that all units, devices and appliances used are actually suitable for this higher loading.
- If you have to operate the thyristor power converter at a rated motor voltage and/or a rated motor current significantly below the figures stated in the thyristor power converter's output data, you must take appropriate precautionary measures to protect the unit against overspeed, overload, breakage, etc., by modifying the software or hardware appropriately.
- For insulation testing, you must disconnect all cables from the thyristor power converter. You should avoid operating your unit at values other than the rated data. Non-compliance with these instructions may cause lasting damage to the thyristor power converter.

- The thyristor power converter possesses a number of automatic reset functions. When these functions are executed, the unit will be reset after an error and will then resume operation. These functions should not be used if other units and devices are not suitable for an operating mode of this kind, or if their use might entail dangerous situations.

Warning of electrostatic discharge:
this symbol warns you against electrostatic discharges which may damage the unit. Where appropriate, the text printed next to this symbol describes how a risk of this kind may be avoided.

Notes

Notes supply information on states requiring particular attention, or indicate that additional information is available on a specific topic. For this purpose, the following symbols are used:

CAUTION! **Cautions** are designed to draw your attention to a particular state of affairs.

Note A **note** contains or refers you to additional information available on the particular topic concerned.

Mains connection

You can use a switch disconnector (with fuses) in the power supply of the thyristor power converter to disconnect the electrical components of the unit from the power supply for installation and maintenance work. The type of disconnector used must be a switch disconnector as per EN 60947-3, Class B, so as to comply with EU regulations, or a circuit-breaker type which switches off the load circuit by means of an auxiliary contact causing the breaker's main contacts to open. The mains disconnector must be locked in its "OPEN" position during any installation and maintenance work.

EMERGENCY STOP buttons

EMERGENCY STOP buttons must be installed at each control desk and at all other control panels requiring an emergency stop function. Pressing the STOP button on the CDP 312 control panel of the thyristor power converter will neither cause an emergency motor stop, nor will the drive be disconnected from any dangerous potential.

To avoid unintentional operating states, or to shut the unit down in case of any imminent danger according to the standards in the safety instructions it is **not** sufficient to **merely** shut down the drive via signals „RUN“, „drive OFF“ or „Emergency Stop“ respectively „control panel“ or „PC tool“.

Intended use

The operating instructions cannot take into consideration every possible case of configuration, operation or maintenance. Thus, they mainly give such advice only, which is required by qualified personnel for normal operation of the machines and devices in industrial installations.

If in special cases the electrical machines and devices are intended for use in non-industrial installations - which may require stricter safety regulations (e.g. protection against contact by children or similar) -, these additional safety measures for the installation must be provided by the customer during assembly.

Contents

IV F OPERATING INSTRUCTIONS

Safety Instructions

Chapter 1-Introduction

How to use this manual ..... IV F 1-1
Contents of this manual ..... IV F 1-1
Target group ..... IV F 1-1
Associated publications ..... IV F 1-1
Incoming inspection ..... IV F 1-2
Storage and transport ..... IV F 1-2
Rating plate ..... IV F 1-2

Chapter 2-Start-Up Instructions

General notes ..... IV F 2-1
2.1 Preparatory work ..... IV F 2-7
2.2 Scaling intra-unit signals ..... IV F 2-8
2.3 Presetting the field supply unit ..... IV F 2-10
2.4 Adjusting the current controller ..... IV F 2-13
2.5 Speed feedback balancing ..... IV F 2-15
2.6 Balancing the field supply unit and the EMF controller ..... IV F 2-18
2.7 Balancing the speed controller, plus fine-balancing the EMF ..... IV F 2-22
2.8 Matching the thyristor power converter unit to the system conditions concerned ..... IV F 2-23
2.9 Manual balancing of the controllers ..... IV F 2-23
2.10 Start-Up of the serial communication ..... IV F 2-24
- DCS 600 and APC ..... IV F 2-24
- DCS 600 and AC 70 (PM 810) ..... IV F 2-25
- DCS 600 and AC 80 Module bus ..... IV F 2-26
- DCS 600 and AC 80 Drive bus ..... IV F 2-27
- DCS 600 and FCI (CI 810) / AC 400 ..... IV F 2-28
- DCS 600 and Profibus ..... IV F 2-29
- DCS 600 and Modbus PLUS ..... IV F 2-31
- DCS 600 and CS 31 ..... IV F 2-33
- DCS 600 and DCF 600 by FEXlink ..... IV F 2-34

Chapter 3 - Handling of Control Panel CDP 312

3.1 Overview ..... IV F 3-1
- Panel Link ..... IV F 3-1
- Mounting the Panel ..... IV F 3-1
- Languages for Panel Display ..... IV F 3-1

3.2 Start Mode ..... IV F 3-2
3.3 Panel Functions ..... IV F 3-3
- Actual Signal Display Mode ..... IV F 3-3
- Parameter Mode ..... IV F 3-4
- Function Mode ..... IV F 3-4
- Drive Mode ..... IV F 3-5
- Reference Input ..... IV F 3-5

3.4 Parameter Selecting and Changing of Value.....IV F 3-6
3.5 Saving of the Parameters to backup memory.....IV F 3-8
3.6 FAULT resetting (RESET).....IV F 3-9
3.7 EMERGENCY STOP resetting (RESET).....IV F 3-9
3.8 Fault History Display.....IV F 3-10
3.9 Uploading and Downloading of Parameters (UPLOAD/DOWNLOAD).....IV F 3-11
3.10 Setting of the Display Contrast.....IV F 3-14
3.11 Full Name of Actual Signals.....IV F 3-14
3.12 Selection of Actual Signals Group 1 ... 9.....IV F 3-15
3.13 Drive Mode.....IV F 3-16
3.14 Running the Drive.....IV F 3-17
Operational Command Keys.....IV F 3-17
Running the DC- Drive from the CDP 312.....IV F 3-17
3.15 Speed Reference Setting for the Drive.....IV F 3-18

Chapter 4 - Signals and Troubleshooting

4.1 Display of status, alarm and fault signals.....IV F 4-1
Categories of signals and possibilities of display.....IV F 4-1
4.2 General messages.....IV F 4-2
From SDCS-CON-2 board.....IV F 4-2
From SDCS-AMC-DC board.....IV F 4-2
4.3 Starting errors (E) [from SDCS-CON-2 board].....IV F 4-2
4.4 Fault Signals (F).....IV F 4-3
Fault Signals referring to the SDCS-AMC-DC board.....IV F 4-10
4.5 Alarm Signals (A).....IV F 4-12
Alarm Signals referring to the SDCS-AMC-DC board.....IV F 4-14

Chapter 1 - Introduction

How to use this manual

The purpose of these operating instructions is to provide detailed information on how to start up a thyristor power converter from the **DCS 600** series.

Note: If it is not mentioned explicitly all details given in these Operating Instructions will be valid for series DCS 600!

Contents of this manual

Chapter 1 - Introduction
It describes how to use this manual and the boundary conditions applying.

Chapter 2 - Start-Up Instructions
We recommend working your way through the Start-Up Instructions step by step, since in this way you will get to perform all important parameter setting routines.

Chapter 3 - How to Handle the Control and Display Panel
This chapter describes how to operate the CDP 312 control and display panel.

Chapter 4 - Signals and Troubleshooting
This chapter describes the available signals and possibilities of display with DCS 600. As far as fault signals are concerned there will be indicated measures (actions) to be taken for troubleshooting.

Target group

This manual is designed to help those responsible for planning, installing, starting up and servicing the thyristor power converter. These people should possess

- basic knowledge of physics and electrical engineering, electrical wiring principles, components and symbols used in electrical engineering, and
- basic experience with DC drives and products.

Associated publications

The **DCS 600** documentation includes the following:

System Descriptions DCS 600
Technical Data DCS Thyristor Power Converters
Software Description DCS 600
Service Manual
12-Pulse Manual
Installation Manual
DCS 600 - Description of the drive-specific serial link interconnections
These Operating Instructions

Incoming inspection

After opening this package, you should check whether it contains the following items:

- DCS 600 thyristor power converter in the configuration ordered
- DCS 600 publications
- Accessories, including manuals if ordered
- Final test report

Check the consignment for any signs of damage. If you find any, please contact the insurance company or the supplier.
Check the particulars given on the unit's rating plate to make sure prior to installation and start-up that you have received the correct unit type and unit version.

If the consignment is incomplete or contains any incorrect items, please contact the supplier.

CAUTION! The thyristor power converter weighs quite a lot and should therefore not be held by the front cover. Please put the unit down only on its back (sizes C1 to C3). Always use due care when handling the unit, so as to avoid injuries or damage.

Storage and transport

If the unit had been in storage prior to installation or is transported to another location, care must be taken to ensure that the environmental conditions are complied with *(see "System Description DCS 600").*

Rating plate

For purposes of identification, each thyristor power converter is fitted with rating plates, stating the type code and the serial number, which serve for each unit's individual identification.
The type code contains information on the characteristics and the configuration of the unit. The first three digits of the serial number refer to the year and week of manufacture. The last digits complete the serial number so as to preclude two units receiving the same type code and the same serial number.
The group 4 provides information on the unit's software configuration.

The technical data and specifications are valid as of going to press. ABB reserves the right to make subsequent alterations.

If you have any questions concerning your drive system, please contact your local ABB agent.

General notes

CAUTION: it is absolutely essential that the applicable accident prevention regulations be observed by the user (in this context, please also read the chapter entitled "Safety Instructions")!

How this chapter is structured

For better understanding the individual steps of start-up work are distinguished by

a) frames **without** any additional marking on the left side:

⇨ **These steps of start-up work must always be performed (= mandatory start-up work)!**

Example:

42.06 = Rated line voltage
This is used to scale those parameters referring to the line voltage, ...

b) frames **with** marking on the left side (“columns” shaded in grey):

⇨ **These steps of start-up work have to be performed only when the condition stated** (as heading) **applies to the selected drive configuration!** After this work has been completed, the **mandatory start-up work** has to be continued.

Example:

Set this only for units with a rated current ≥ 2050A in case of control board exchange!

42.07 = Rated power converter current
Enter numerical value from rating plate here

Recommended motor voltages and field voltages

- Motor voltage U_A when the following units are used
  DCS 601: **U_{Amax} = Line voltage * 1.16** (2- quadrant unit)
  DCS 602: **U_{Amax} = Line voltage * 1.05** (4- quadrant unit)
- Field voltage U_F (= max. output voltage) when the following is being used
  SDCS-FEX-1: **U_F = Line voltage * 0.9**
  If there is a divergence of more than 10 % between the field supply unit’s output voltage and the rated field voltage U_{Frated} stated on the motor’s rating plate, then the connecting voltage U_N should be reduced, using a matching transformer or a series resistor R_v: **$R_v = (0.9 * U_N - U_F) / I_F$** I_F = Rated field current
  (Note: also suitable for fine-balancing the maximum motor voltage)
- Field voltage U_F when the following is being used
  SDCS-FEX-2 /
  DCF 503 / DCF 504: **U_F = Line voltage * 0.6 ... 0.8**
- Field voltage U_F when the following is being used
  DCF 601: **U_F = Line voltage * 0.5 ... 1.1**
  Maximally possible output voltage U_{Amax} using
  DCF 601 / DCF 602: **U_{Amax} = Line voltage * 1.35**

Phase sequence when connecting to the mains / Potential isolation

No special phase sequence required for the main connections U1, V1 and W1!

Phase coordination between electronics section and power section not necessary!

For potential isolation and for avoiding ground loops, an isolating transformer should be installed upstream when an oscilloscope is being used.

Preventing unintended operating states / Shutting the drive down

CAUTION! As laid down in DIN 57100 Part 727 / VDE 0100 Part 727 (Preventing unintended operating states), shutting the drive down by means of the signals at the binary inputs DIx is **not** sufficient in itself as the sole measure involved for avoiding unintended operating states or shutting the drive down in the event of danger!

Range of application for the Start-Up Instructions

The Start-Up Instructions are referenced to the **parameter settings** in their as-delivered condition (default values) and to the **unit wiring** as shown in the connection diagram (see *System description **DCS 600***).
These Operating Instructions only describe the start-up procedure via panel CDP 312 when in LOCAL mode or/and via PC program DRIVES WINDOW.

Method of functioning of the binary input DI5

- **Binary input DI5;** designation EM STOP
  The binary input DI5, e.g. terminal X6:5 of control board SDCS-CON-2, must be set to logical "1” in order to get no operation of the EMERGENCY STOP function. This configuration takes into account the requirements of a fail-safe-circuit.
  The incoming signal is inverted by means of the Parameter 13.12 thus setting the internal signal EMERGENCY STOP to logical "0”. If the external signal is "0”,the EMERGENCY STOP function will be active and the alarm signal A 102 will appear. The drive will react in accordance with the setting of Parameter 21.04 EME_STOP_ MODE (presetting is: 1 = STOP WITH RAMP). The ramp time is set by Parameter 22.04. After resetting of the signal, i.e. external signal set back to logical "1”, the ON command has to be repeated.

Software identification

The software identification of the SDCS-CON2 board is in parameter **4.11**.
The software identification of the SDCS-AMC-DC board is in parameter **4.2**.
The application identification from ABB Lampertheim is [DCS600xx] in parameter **4.3**.
Different coded applications are handled and supported from local ABB organizations.

Internal signal connections

The software of the units series DCS 600 is divided into two parts which are handled by processors integrated in the respective boards **SDCS-CON-2 (Software 15.2xx)** and **SDCS-AMC-DC (Software 15.6xx).**

The upload of signals from SDCS-CON-2 to SDCS-AMC-DC board are operated by:

- 6 automatic channels
- 11 programmable channels, selectable in group 94 (see *Software description - chapter 31*)

The 6 automatic channels are used by the functions:

- **Display** signals at control panel CDP 312
- **Monitor** signals at Drive*Window* Tool
- **Data Logger** at Drive*Window* Tool

If

- more than 6 signals of the SDCS-CON-2 board are selected, or
- the function **Signals and Parameter** of Drive*Window*, or
- the overriding control (AC 80, AC 70…)

is used for monitoring, the signals should be selected in group 94.xx

Note: In the below mentioned tables **AMC / CON-2** will be used as type designations instead of **SDCS-AMC-DC / SDCS-CON-2**.

- **Fixed (defined) values**
  Cyclic transmission is used for fixed values. Fixed values are:

Cyclic transmission from --> to			**Parameter**	**Function**	**Cyclic transmission time**
AMC	-->	CON-2	—	Internal Control Word	2 ms
AMC	-->	CON-2	—	Reserved	2 ms
AMC	-->	CON-2	**2.13**	Torque reference value	2 ms
AMC	-->	CON-2	**5.06**	Analogue output 1	2 ms
AMC	-->	CON-2	**5.07**	Analogue output 2	2 ms
AMC	-->	CON-2	—	Local reference 3	8 ms

CON-2 -->	AMC	—	Internal Status Word	2 ms
CON-2 -->	AMC	**1.02**	Actual speed value (speed_act)	2 ms
CON-2 -->	AMC	**1.08**	Actual torque value (torque_act)	2 ms
CON-2 -->	AMC	**5.02**	Analogue input 1	4 ms
CON-2 -->	AMC	**5.03**	Analogue input 2	4 ms
CON-2 -->	AMC	**5.04**	Analogue input 3	4 ms
CON-2 -->	AMC	**5.05**	Analogue input 4	4 ms
CON-2 -->	AMC	**5.08**	Analogue input 5	4 ms
CON-2 -->	AMC	**5.09**	Analogue input 6	4 ms
CON-2 -->	AMC	**2.17**	Calculated positive limit of torque value (tc_torqmax)	8 ms
CON-2 -->	AMC	**2.18**	Calculated negative limit of torque value (tc_torqmin)	8 ms
CON-2 -->	AMC	**6.05**	Packed signals from CON-2 (con2_bits)	8 ms
CON-2 -->	AMC	**8.05**	Packed binary inputs (di_status_word)	8 ms

- **Programmable values (can be changed for monitoring of other signals)**
  Cyclic transmission time for the first three programmable values is every 2 ms, for all other values every 8 ms:

Cyclic transmission from	-->	to	Enter parameter in	Cyclic transmission time	Default
AMC	-->	CON-2	**95.01**	2 ms	3.11 CURRENT REF
AMC	-->	CON-2	**95.02**	2 ms	45.01 FLUX REF
AMC	-->	CON-2	**95.03**	2 ms	45.03 EMF REF
AMC	-->	CON-2	**95.04**	8 ms	0
AMC	-->	CON-2	**95.05**	8 ms	0
AMC	-->	CON-2	**95.06**	8 ms	0
AMC	-->	CON-2	**95.07**	8 ms	0
AMC	-->	CON-2	**95.08**	8 ms	0
AMC	-->	CON-2	**95.09**	8 ms	0
AMC	-->	CON-2	**95.10**	8 ms	0
AMC	-->	CON-2	**95.11**	8 ms	0
AMC	-->	CON-2	**95.12**	8 ms	0
AMC	-->	CON-2	**95.13**	8 ms	0
CON-2	-->	AMC	**94.01**	2 ms	3.13 ARM ALPHA
CON-2	-->	AMC	**94.02**	2 ms	1.15 CONV CUR
CON-2	-->	AMC	**94.03**	2 ms	3.12 CUR REF3
CON-2	-->	AMC	**94.04**	8 ms	1.11 RL MAINS VOLT ACT
CON-2	-->	AMC	**94.05**	8 ms	1.13 RL ARM VOLT ACT
CON-2	-->	AMC	**94.06**	8 ms	1.28 LOAD CUR ACT FILT
CON-2	-->	AMC	**94.07**	8 ms	1.17 RL EMF VOLT ACT
CON-2	-->	AMC	**94.08**	8 ms	1.24 HEATSINK TEMP
CON-2	-->	AMC	**94.09**	8 ms	1.20 MOT1 CALC TEMP
CON-2	-->	AMC	**94.10**	8 ms	3.17 FIELD CUR REF M1
CON-2	-->	AMC	**94.11**	8 ms	3.19 REL FIELD CUR M1

For example: Display of actual field current value 3.19 in 8 ms ⇒ **94.11 = 3.19.**
Then call for display of Parameter 3.19.

Symbols for switching the electronics or the power section ON and OFF

	- Switch **ON** electronics (EI) - Switch **ON** contactor, i.e. the unit will be connected to the supply (**POWER ON**)	Control Panel key: (when in LOCAL mode)	
	- Switch **OFF** electronics (EI) - Switch **OFF** contactor, i.e. the unit will be disconnected from the supply (**POWER OFF**)	Control Panel key: (when in LOCAL mode)	

Symbols for enabling / disabling the reference

	- ENABLE reference, i.e. **START DRIVE**	Control Panel key: (when in LOCAL mode)	
	- DISABLE reference, i.e. **STOP DRIVE**	Control Panel key: (when in LOCAL mode)	

System-dependent planning

During normal operation the control commands like **SWITCH ON** and **SWITCH OFF**, **ENABLE** etc. will be preset by APC2 or fieldbus adapter. These Operating Instructions only describe the start-up procedure via panel CDP 312 when in LOCAL mode or/and via PC program DRIVES WINDOW.

During the start-up procedure a suitable possibility for safe shutdown (switching OFF) will be required if there is a wrong setting of parameters. In most cases it will not be sufficient to allow an operation of EMERGENCY STOP (EME-STOP) with a ramp function!

Symbol for altering parameters

	Enter at keyboard (with Parameter Mode [PAR])	e.g. 15.05 = 3	Assign the value of 3 to Parameter 15.05

Symbol for displaying parameter values

	Display		

Symbol for measuring physical variables

	Measure		

2.1 Preparatory work

Check the unit for damage in transit or other damage.

Install and wire unit; connect all inputs and outputs required.
Proceed in the same way for the field supply unit as well.

Check whether protective measures, earthing, screening, etc. have been taken in accordance with the system conditions involved.

Check the rated value of the supply voltage for the electronics and the fan:

- matching transformer necessary when:
  - electronics supply is not equal to 115 V/230 V
  - single-phase-fan supply is not equal to 230 V
  - three-phase-fan supply is not within the range of 400 V .... 690 V (star/delta connection).

Check the rated value of the supply voltage for the armature-circuit converter's power section; the particulars given on the rating plate must be ≧ than the rated line voltage.
If this condition is not satisfied, then the following applies:
- use an isolating transformer, or
- use a suitable unit.

Check the rated value of the supply voltage for the field supply unit.
(Particulars on rating plate ≧ rated line voltage?
Is an auxiliary transformer or perhaps a series resistor necessary?)

Check the wiring, fusing, the cross-sectional areas of the cables.

Check the system's EMERGENCY STOP for proper functioning! Set the system-side monitoring functions, and activate them. Check whether auxiliaries, such as motor fans or unit fans, function properly; while doing this, also check for correct direction of rotation and voltage level as well!

2.2 Scaling intra-unit signals

Make sure that the existing electronics supply voltage has been set on the SDCS-POW-1 power supply board as well, using the SW1 switch.
If an encoder is being used as the speed feedback device, make sure that the correct supply voltage has been set on the boards
SDCS-POW-1: ⇒ X3: / X4: / X5: SDCS-IOB-3: ⇒ S4

Switch on the power supply to the electronics section.

The display of the Control Panel CDP 312 / DRIVES WINDOW may show a fault or an alarm signal or the seven segment display may indicate an error code as a sequence of characters and digits.

NOTE: For Software downloading observe the relevant instructions given on the "read_me" file of the corresponding Software disc!

Set this only for units with a rated current 25 ... 2000A in case of control board exchange!

15.02 = 22
After successful saving of the altered data this Parameter 15.02 will be reset to zero.

Set this only for units with a rated current ≥ 2050A in case of control board exchange!

42.07 = Rated power converter current
Enter numerical value from rating plate here
42.08 = Rated power converter supply voltage / coding of voltage measurement (see technical data 5-12)
Enter numerical value from rating plate here
42.09 = 45 degrees Celsius
Temperature monitoring of power section
42.10 = C4 ⇒ Size C4 has been selected
Coding for unit type
42.11 = 1 : Single bridge (2-Q) converter ⇒ on rating plate: DCS 60**1** xxxx
4 : Double bridge (4-Q) converter⇒ on rating plate: DCS 60**2** xxxx
Coding for power section (bridge) type

CAUTION! Please don't forget!
Save the altered data of unit type, i.e. Parameters 42.07 ... 42.11:
15.02 = 22
After successful saving of the altered data this Parameter 15.02 will be reset to zero.

Presetting of the **EMERGENCY STOP** function via binary input DI5:
Connection of this signal has to correspond with the configuration of a fail-safe-circuit, i.e. if the signal applied to DI5 is "0" (parameter 12.16 EME STOP SEL is set to DI5), the **EMERGENCY STOP** function will operate (will be activated).

13.12 = INVERTED
Inverting the incoming signals

21.04 = e.g. COAST STOP
The drive will coast to stop with this setting

22.04 = e.g. 1 ⇒ 1 sec
Setting of the ramp time with **EMERGENCY STOP** function provided that the Parameter 21.04 = RAMP STOP has been selected

Input of data concerning the connected I/O boards:

98.08 = Make settings which correspond to the hardware configuration used.
Input of data is necessary as the software will check the availability of the I/O bords as specified by settings.

Input of motor data and line voltage:

41.03 = Rated motor field current
Max. field current of the motor as indicated on rating plate. This is used to scale those parameters referring to the motor field current, such as field current limitation and field current monitoring.

42.06 = Rated line voltage
This is used to scale those parameters referring to the line voltage, such as line undervoltage.

99.02 = Rated motor voltage
Scaling speed for speed control with EMF feedback.

99.03 = Rated motor current
This is used to scale those parameters referring to the rated motor current, such as current limitation or torque limitation.

99.05 = Speed at field weakening point
Maximum speed of motor within armature control range and flux control.
Scaling speed for speed control with EMF feedback.
Note: Calculation of the nominal torque 4.22 is based on this parameter.

41.19 = Int EMF REF
Reference for voltage control in field weakening range.

50.01 = Speed scaling
Speed of the motor to be scaled to 20 000.
This scaling is used for overriding control and for internal dataprocessing, i.e. scaling of the speed dependent parameters, such as min. and max. values.
Note 1: The Speed scaling must be set in the range of 87%…500% of the motor nominal speed (99.05).
Note 2: The Software DRIVES WINDOW and the Control Panel CDP 312 will always display physical units!

2.3 Presetting the field supply unit

Make sure that existing supply voltages for power section, field supply unit (field exciter) and field winding, fan, etc. match the rated data of the components used.

Switch ON power.

DANGER: System components now energized!

Please wait a few moments. During this time, the unit compares the phase sequence set in the parameter with that obtaining at the power section.
If the unit outputs the "Phase sequence fault of power section" signal (**F 38 PHAS SEQU**):
- switch off unit completely and disconnect from the mains, interchange two phases at the input, and start again from the beginning of this chapter.

or
- enter: **42.01 = R-T-S** and then acknowledge fault signal.

Unit will automatically adapt to phase sequence; this signal is to be interpreted as information to the effect that the fans' direction of rotation may be wrong for size-C3 or size-C4 units (observe direction of arrow on the fan).

Only for uncontrolled field supply with SDCS-FEX-1!

15.05 = 1

Check field current and field voltage by measuring them.

Switch OFF power!

Continue with Chapter 2.4

Only for controlled field supply with SDCS-FEX-2 or DCF 503/DCF 504!

15.05 = 2
41.03 = Rated motor field current has already been set
44.17 = Field current for "Under-excitation" signal

Check field current and field voltage by measuring them;
if necessary, correct field current with **41.03**.

15.02 = 5

Activates the field current controller's auto-tuning function.

Action has been completed when **"0"** (zero) is shown on the display.

Note: use online mode in Drive*Window*

If the unit aborts the auto-tuning routine with the signal 15.02 = -1, the probable cause of this can be read out of Parameter **6.02** and has to be eliminated as far as possible (supply, switching sequence, field contactor wiring etc.).
Afterwards repeat the auto-tuning routine.
If necessary, perform manual balancing.

Switch OFF power!

Continue with Chapter 2.4

Only for DCS 600 converters connected to DCF 601 or DCF 602 field supply unit

15.05= 2
41.03 = Rated motor field current (first field exciter) has already been set.
44.17= Field current (first field exciter) **for "Under-excitation" signal**

Switch OFF power!

Before adjustment of the armature-circuit power converter is continued (Chapters 2.4 etc.), **first** perform the start-up routine for the **DCF 601 or DCF 602** field supply unit.

This steps take place into the DCF 601/602 field supply unit!

Make sure the correct wiring between 3-phase Field exciter DCF 601, DCF 602 and the overvoltage protection unit DCF 505, DCF 506

- powercircuit
- Digital feedback signal of DCF 506

Switch ON DCF 601, DCF 602.

DANGER: System components now energized!

15.16 = 5 (Field Exc)
99.02 = 02 Rated motor field voltage
99.03 = 03 Rated motor field current
(same as in 41.03 of DCS armature converter)
50.03 = 4
43.13 = 4 or higher (Bridge reversal time)
43.06 = 0
28.22 = 500% (disable overvoltage monitoring)

Switch ON DCF 601, DCF 602.

check field current and field voltage by measuring them

Disable reference

15.02 = 5 (start autotuning current controller)
Activates the field current controller's auto-tuning function.
Action has been completed when **"0"** (zero) is shown on the display.

Note: use online mode in Drive*Window*

If the unit aborts the auto-tuning routine with the signal 15.02 = -1, the probable cause of this can be read out of Parameter **6.02** and has to be eliminated as far as possible (supply, switching sequence, field contactor wiring etc.). Afterwards repeat the auto-tuning routine. If necessary, perform manual balancing.

Switch OFF power!

X16: Field exciter communication see chapter *2.10 - Start-up of the serial communication* -part ***DCS 600 and DCF 600 by FEXlink***

DCF converter	**15.21 = ?**	**DCS converter**	**15.05 = ?**
	15.22 = ?		**41.03 = ?** (for display purpose)
	46.07 = ?		

Note: The field current control parameters of the armature converter (44.02, 44.08, ...) are **not used**.

2.4 Adjusting the current controller

Make sure that static current limitation Bridge 1 (20.12) and Bridge 2 (20.13; with 4Q-unit) have been set to the same value; values of all parameters for current reference limitation must be bigger than 20 %; conditions have been satisfied if default setting has been taken as starting point; setting to maximally required motor current is recommended.

Drive must not turn! Do not preset an external reference!
15.02 = 3
Activate the current controller's auto-tuning function.
Start the next two steps within the next 20 seconds!

Switch ON power.
DANGER: System components now energized!

Start drive.

When the display shows **"0"** (zero) stop drive; it may happen that the unit runs armature-circuit current since EMF control is active.
Note: use online mode in Drive*Window*

Switch OFF power!

If the unit aborts the auto-tuning routine with the signal 15.02 = -1, the probable cause of this can be read out of Parameter **6.02** and has to be eliminated as far as possible (supply, switching sequence, field contactor wiring, missing field contactor etc.).
Afterwards repeat the auto-tuning routine.
If necessary, perform manual balancing.

Only if the unit aborts the auto-tuning routine with a fault signal *FIELD REMOVAL?*!

Read out values of:
41.11 = ... **41.12** = ... **43.02** = ... **43.03** = ... **43.06** = ...

15.05 = 0

Switch OFF power supply to the electronics section!
Make sure that **no** field current is flowing, e.g. by removing the supply fuses!

Switch the electronics section's power supply on again!

	Drive must not turn! Do not preset an external reference! **15.02 = 3** Activate the current controller's auto-tuning function. **Start the next two steps within the next 20 seconds!**
	Switch ON power. **DANGER**: System components now energized!
	Start drive.
	When the display shows **"0"** (zero) stop drive; it may happen that the unit runs armature-circuit current since EMF control is active. If the unit aborts the auto-tuning routine with the signal 15.02 = -1, the probable cause of this can be read out of Parameter **6.02** and has to be eliminated as far as possible (supply, switching sequence etc.). Afterwards repeat the auto-tuning routine. If necessary, perform manual balancing.
	Switch OFF power!
	Read out values of: **41.11** = ... **41.12** = ... **43.02** = ... **43.03** = ... **43.06** = ...
	Use values of **41.11** and **43.06** from the first auto-tuning routine. Re-activate the field unit used by entering: a) **15.05 = 1** **or** b) **15.05 = 2** and install the supply fuses removed before!

2.5 Speed feedback balancing

Activate EMF speed feedback:
50.03 = CALC BY EMF
Select no field weakening mode:
15.06 = FIX

50.01 = **Desired speed** / or **motor rating plate**
Scale speed control circuit to maximum speed.

Switch ON power.
DANGER: System components now energized!

Start drive.

Increase reference value in LOCAL mode to 10 % of the maximum speed.

Drive should run up to 10 % of the rated voltage.

Continue with one of the following sections:
- Only when an analog tacho is being used!
- Only when an encoder (pulse encoder) is being used!
- Only when the EMF signal is being used as speed feedback!

Only when an analog tacho is being used!

Connect measuring instrument:
- to **X3: 1... 3** or **X1: 1... 3**
+ to **X3: 4** or **X1: 4**
Check to make sure that the tacho voltage does not exceed the input voltage range selected with maximum speed.
Turn Potentiometer **R2716** [on SDCS-CON-2 board] or **R9** [on PS5311 board; if SDCS-IOB-3 board is used with PS5311] to minimum (left-hand stop).The measured value must have a positive sign; if necessary interchange tacho cables.

Stop the drive and switch OFF power!

50.03 = ANALOGUE TAC
Analog tacho is used for speed control.

Switch ON power.
DANGER: System components now energized!

Start drive.

Increase reference value in LOCAL mode to 10 % of the maximum speed.

Drive should run up to 10 % of the rated voltage.

Use Potentiometer **R2716** [on SDCS-CON-2 board] or **R9** [on PS5311 board] to set the tacho voltage to 10 % of the maximum tacho voltage.

Stop the drive and switch OFF power!

Only when an encoder (pulse encoder) is being used!

3.07 = **Content of pulse counter *)**
If the shape of the curve corresponds to the diagram below, this means the wiring is correct and the pulses will be correctly evaluated [see also documentation entitled "*Technical Data", Chapter I/O boards*].

*) This Parameter must be transmitted from the SDCS-CON-2 board to the SDCS-AMC-DC board!

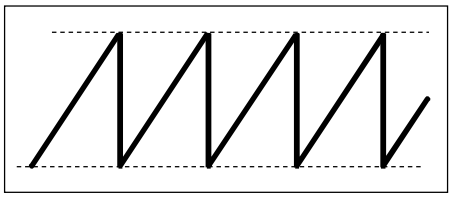

Fig.: Curve shape of the encoder's pulse counter for sense of rotation "forwards"

Switch OFF power, thus stopping the drive; drive coasts.

50.04 = Number of encoder pulses
As specified on the encoder's rating plate
50.03 = CON- ENCODER
The encoder connected to the SDCS-CON-2 board is used for speed control.

Switch ON power.

DANGER: System components now energized!

Start drive.

Increase reference value in LOCAL mode to 10 % of the maximum speed.

	Drive should run at 10 % of the desired speed; if possible, check with manual tacho.
	Stop the drive and switch OFF power!

Only when the EMF signal is being used as speed feedback!

	Drive should run at 10 % of the desired speed; if possible, check with manual tacho.
	Stop the drive and switch OFF power!

2.6 Balancing the field supply unit and the EMF controller

When matching the field supply unit to the system conditions, differences in the procedures must be taken into account; these different procedures result from the operating mode used. **Only the work of that section has to be performed which deals with the operating mode actually used in your system!**

Constant field current control	⇒	Section ***2.6.1***
Field weakening control with setting range smaller than 1 : 1.5	⇒	Section ***2.6.2***
Field weakening control with setting range larger than 1 : 1.5	⇒	Section ***2.6.3***

2.6.1 Constant field current control

Switch ON power.

⚠ **DANGER**: System components now energized!

Start drive.

Measure motor voltage with the **ARM_VOLT_ACT** signal, Parameter 1.14 *).

Increase **speed reference value** in LOCAL mode slowly while observing the motor voltage.

The motor voltage must not exceed the recommended motor voltage; see *General notes* at the beginning of this chapter.

*) This Parameter must be transmitted from the SDCS-CON-2 board to the SDCS-AMC-DC board!

Measure speed with manual tacho;
check rated speed when an analog tacho is being used;
if necessary, correct with Potentiometer **R2716** [on SDCS-CON-2 board] or **R9** [on PS5311 board].

Stop the drive and switch OFF power!

Continue with Chapter 2.7

2.6.2 Field weakening control with setting range < 1 : 1.5

CAUTION: Not permitted when Chapter 2.5 was quit with EMF control!

15.06 = EMF CON
Field weakening function activated
99.05 = Speed at field weakening point according to motor rating plate
41.19 = ? reference armature voltage scaled to Supply voltage

Switch ON power.

DANGER: System components now energized!

Start drive.

Measure motor voltage with the **ARM_VOLT_ACT** signal, Parameter 1.14 *).
Increase **speed reference value** in LOCAL mode slowly while observing the motor voltage.
The motor voltage must not exceed the recommended motor voltage; see *General notes* at the beginning of this chapter.
Check that field is being weakened.
Do not exceed the maximum motor speed permitted. When an analog tacho is being used, the display at the CDP 312 panel is not yet necessarily correct.
The motor voltage must not exceed the recommended motor voltage; see *General notes* at the beginning of this chapter.

If the field is not being properly weakened, or not being weakened at all, perform the work of section *"Field weakening control with setting range larger than 1 : 1.5"* !

*) This Parameter must be transmitted from the SDCS-CON-2 board to the SDCS-AMC-DC board!

Measure speed with manual tacho;
check rated speed when an analog tacho is being used;
if necessary, correct with Potentiometer **R2716** [on SDCS-CON-2 board] or **R9** [on PS5311 board].

Stop the drive and switch OFF power!

2.6.3 Field weakening control with setting range > 1 : 1.5

CAUTION: Not permitted when Chapter 2.5 was quit with EMF control!

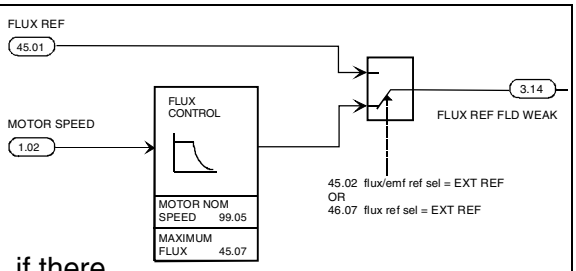

15.06 = EMF CON
Field weakening function activated.
46.01 = 0
46.02 = 0
EMF controller switched off by limitation.
46.07 = EXT REF
Links up the Parameter 45.01 as the flux reference value; this will only be possible, if there is still no connection to an APC.
45.01 = 100 % (in the PC program DRIVES WINDOW = 99.98 %)
Flux reference value set to 100 %

The next steps serve to determine the motor's field characteristic. For this purpose, the reference setting in "LOCAL" mode is used to adjust a speed n which is within the motor's basic speed range and can be easily converted into 90 %, 70 % and 40 %.
Example: if n is selected so as to produce a motor voltage of 300 V, then 90 % will correspond to 270 V, 70 % to 210 V and 40 % to 120 V.
For determination of the motor's field characteristic the actual values **EMF_V** (Parameter 1.17) and **FIELD1 CUR_ACT** (Parameter 3.19) will be required.
Both values have to be set by means of the Control Panel in "ACT" (Actual Signal Display) mode and must be transmitted from the SDCS-CON-2 board to the SDCS-AMC-DC board. The Parameter 94.11 already includes Parameter 3.19 as default setting, i.e. only the value of Parameter 1.17 has to be set to e.g. 94.01 = 117:
94.01 = 117 (only required, if the values are to be displayed on DRIVES WINDOW!).

Switch ON power.
DANGER: System components now energized!

Start drive.

Increase speed reference value in LOCAL mode until the Parameter 1.17 will show a value of 100 % for RL EMF VOLT ACT (⇒ 300 V in the example) as desired in the aforementioned steps.

45.01 = **decrease so that RL EMF VOLT ACT (1.17) is 90 %.**
Flux and thus the field current as well are reduced.
How to proceed using the Control Panel:
1. decrease **45.01** (in steps of 5 at a time)
2. press **ACT**, read off Parameter 1.17
3. press **PAR** and correct **45.01** if necessary (then continue with 2.)

Read out and note down value of:
3.19 = ... % (value for **41.16**; will later be entered)

45.01 = **decrease so that RL EMF VOLT ACT (1.17) is 70%.**
Flux and thus the field current as well are reduced.
Proceed as described in (1. / 2. / 3.) above!
Read out and note down value of:
3.19 = ... % (value for **41.15**; will later be entered)

45.01 = **decrease so that RL EMF VOLT ACT (1.17) is 40%.**
Flux and thus the field current as well are reduced.
Proceed as described in (1. / 2. / 3.) above!
Read out and note down value of:
3.19 = ... % (value for **41.14**; will later be entered)

Stop the drive and switch OFF power!

45.01 = 100 %
46.01 = 10
46.02 = - 99
46.07 = SEL REF
As-delivered values (default values) for all 4 parameters restored.
41.19 = ? reference armature voltage scaled to Supply voltage
41.16 = enter the 1st noted down value of **3.19**
41.15 = enter the 2nd noted down value of **3.19**
41.14 = enter the 3rd noted down value of **3.19**
Linearization function matched to field circuit.

99.02 = 90 % of the rated motor voltage.
99.05 = 90 % of the value on the motor rating plate.
These settings provide a bigger safety margin for the motor voltage during start-up.

Only if analog tacho is used as speed feedback!

Switch ON power; start drive.
DANGER: System components now energized!

Increase the **reference value** in LOCAL mode slowly up to maximum speed. Check motor voltage; if value has been set with **99.02,** motor voltage must remain constant, or must not exceed this value.

Measure speed with manual tacho; balance maximum speed with Potentiometer **R2716** [on SDCS-CON-2 board] or **R9** [on PS5311 board].

Stop the drive and switch OFF power!

2.7 Balancing the speed controller, plus fine-balancing the EMF

The balancing procedure indicated below assumes that the coupled load will withstand speed jumps. If this is not allowed for the load, a different setting of the listed parameters will be required.
Reference values switching over between the internal potentiometers POT1 and POT2 (Parameters **17.01** and **17.02**) will be used for balancing the controllers. Parameter PERIOD **17.03** defines the period of switch-over; value 1 corresponds to 10 msec.

15.02 = 9
Switch-over of reference value for the speed controller, also suitable for the EMF controller.

17.04 = SQWAVE
Selection of the reference value switching over between POT1 and POT2.

22.01 = 0,1 s
Ramp-up time of ramp-function generator

22.02 = 0,1 s
Ramp-down time of ramp-function generator

Adjusting the potentiometers for speed controller balancing:
During acceleration/ braking, the drive should reach the current limitation, if necessary increase the value of POT1.

Scaling of **17.01** and **17.02** ⇒ 20 000 corresponds to 100 % speed.
17.01 (POT1) = **10%...20% max. speed**
17.02 (POT2) = **0**
17.03 (PERIOD) = **Adapt as necessary.**

Switch ON power; start drive.

DANGER: System components now energized!
Drive should run at speed values corresponding to POT1 and “0”.

For assessing control quality, the figure below can be used.
Oscillograph speed feedback via D/A output, or if one is to hand, use program DRIVES WINDOW to depict it via the Monitor menu and Parameter **1.04**.

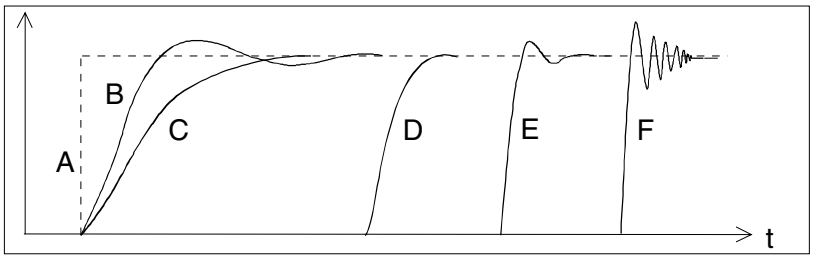

Fig.: Transient response of controller
- A: reference value jump
- B: undercompensated; reset time and P-gain too small
- C: undercompensated; P-gain too small
- D: normal
- E: slightly overcompensated; when a higher dynamic response is required
- F: overcompensated; short reset time and a high P-gain

For this purpose, the following parameters at the speed controller must be adapted:
24.03 (KPS) = **desired response (behaviour) of controller**
24.09 (TIS) = **desired response (behaviour) of controller**

Only when fine-balancing of the EMF controller is wanted!
(Necessary when work as per section 2.6.3. has been performed)

For assessing control quality, the Fig. entitled "Transient response of controller" (⇒ beginning of this chapter) can be used.

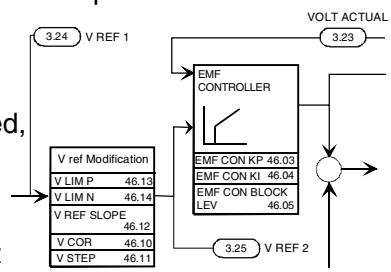

41.19 = ? reference armature voltage scaled to Supply voltage

- If **fine-balancing of the EMF controller** is wanted, potentiometers' settings must be adapted:
  17.01 (POT1) approx. 10 % bigger than speed at field weakening point
  17.02 (POT2) approx. 10% smaller than speed at field weakening point
  The following parameters at the EMF controller must be adapted:
  46.03 (EMF_KP) = **desired response (behaviour) of controller**
  46.04 (EMF_KI) = **desired response (behaviour) of controller.**

Stop the drive and switch OFF power!

15.02 = 0
17.01 = 0
17.02 = 0
99.02 = Rated motor voltage as set in Chapter 2.2
99.05 = Speed at rated motor voltage as set in Chapter 2.2.

2.8 Matching the thyristor power converter unit to the system conditions concerned

- Ramp function generator
- Binary inputs and outputs

- Limit-value messages
- Additional functions

- Link up APC or Fieldbus

2.9 Manual balancing of the controllers

Balancing of the controllers for the armature-circuit current and the field current can be performed by auto-tuning. If this is not possible for some reason, balancing of these controllers as well as balancing of the controllers for speed and EMF has to be performed by the skilled technical start-up personnel.

See also the separate *Software Description DCS 600*, chapter "Manual Tuning".

2.10 Start-Up of the serial communication

DCS 600 and APC

Hardware

DCS 600	SDCS-AMC-DC	board		
APC	YPQ112B	board		
Cable	length 0.2 ... 20 m	plastic optical fibre		
Configuration	YPQ112	first board	channel 1	Drive No 1
			...	
			channel 4	Drive No 4
		second board	channel 1	Drive No 5
			...	
			channel 4	Drive No 8

Associated publications

DCS 600	Technical Data	3ADW000054R0301	ABB Lampertheim
	Software Description	3ADW000076R0401	ABB Lampertheim
	Database	GLOBAL\DEIND\DEIND051.NSF	
APC	FCB function block	3AFY61281240	ABB Helsinki
	YPQ 112	3AFY63982806	ABB Helsinki
	Database	GLOBAL\FIDRI\FIDRI002.NSF	

Software settings

DCS 600	Parameter	98.02	=	3 (ADVANT)	
		70.01	=	1 (fixed)	
		99.10	=	Drive No (see above)	
		70.02	=	Optical power/ cable length (use default)	
		70.20	=	10	
		71.21	=	Star	
	Default connected parameters	Main control word		(data set 10/1)	
		Speed reference		(data set 10/2)	
		Main status word		(data set 11/1)	
		Motor speed		(data set 11/2)	
		For additional p. see SW Descr. chap. ”Communication”			
APC	Node Type	APC2.2/1	Station 0,0		
	DB element	ACS01, ACS02, ACS03			
		Type	YPQ112A up to four drives		
			YPQ112B more than four drives		
		Drtype =	ACS600 MultiDrive		(high performance)
			ACS600 SingleDrive		(low performance)
	FB	ACSRX1			
	Control word (send to drive)	7.01 =	bit10 =	1	

Example for switch-on sequence

Send to control word 7.01	0476H	(ON = 0; READY, if there is no failure)
	0477H	(main contactor ON)
	047FH	(RELEASE for speed and current control)

Note: Before receiving the first dataset the drive sets the CH 0 alarm status

DCS 600 and AC 70 (PM 810)

Hardware

DCS 600	SDCS-AMC-DC	board	
AC 70	TB810	board	Software release 1.1/1 or later
Cable	length 0.2 ... 20 m	plastic optical fibre	
Transmission speed		4Mb	
Ring configuration		up to 12 drives	
Star configuration (NDBU95)		up to 9 drives	

Associated publications

DCS 600	Technical Data	3ADW000054R0301	ABB Lampertheim
	Software Description	3ADW000076R0401	ABB Lampertheim
	Database	GLOBAL\DEIND\DEIND051.NSF	
AC 70	Functional unit part 9 DRICONE	3BSE 013947R0001	ABB Sweden
	ADVANT Controller 70	3BUR 000874R0201	ABB Sweden
	Data base element Advant c. 70	3BSE 009456R0101	ABB Sweden
	PC elements Advant controller 703	BSE 009177R0101	ABB Sweden

Software settings

DCS 600	Parameter	98.02	=	3 (ADVANT)	
		70.01	=	Drive Number	
		70.02	=	Optical power/cable length (use default)	
		70.20	=	10	
		71.21	=	Star or Ring	
	Connected parameters	Main control word		(data set 10/1)	
		Speed reference		(data set 10/2)	
		Main status word		(data set 11/1)	
		Motor speed		(data set 11/2)	
		For additional p. see SW Descr. chap. ”Communication”			
AC 70	Node Type	AC 70			
	DB element	DRIENG1	Type	=	Customer string
			Ref1	=	DRDS 1
			Position	=	Drive Number
			101 ... 112	=	17 ... 28
			201 ... 212	=	33 ... 44
			...	=	...
			701 ... 712	=	113 ... 124
	DRIDS for sending and receiving one Dataset to/from Drive				
			WR_ENA	=	1 (use ”move element”)
			ACT	=	1 (use ”move element”)
			DS_No	=	start with ten for the first dataset to be sent
			O-terminals intended for data received from drive		
			I-terminals intended for data sent to drive		
	Control word (send to drive) 7.01	=	bit10	=	1

Example for switch-on sequence

Send to control word 7.01	0476H	(ON = 0; READY, if there is no failure)
	0477H	(main contactor ON)
	047FH	(RELEASE for speed and current control)

Note: Before receiving the first dataset the drive sets the CH 0 alarm status

DCS 600 and AC 80 Module bus

Hardware

DCS 600	SDCS-AMC-DC	board
AC 80	TB810	board
Cable	length 0.2 ... 20 m	plastic optical fibre
Transmission speed		4Mb
Ring configuration		up to 12 drives
Star configuration (NDBU95)		up to 9 drives

Associated publications

DCS 600	Technical Data	3ADW000054R0301	ABB Lampertheim
	Software Description	3ADW000076R0401	ABB Lampertheim
	Database	GLOBAL\DEIND\DEIND051.NSF	
AC 80	AC 80 User manual	3BFE 64116487	
	AC 80 Reference manual	3BFE 64021737	
	Data base	GLOBAL\FIDRI\FIDRI002.NSF	

Software settings

DCS 600	Parameter	98.02	=	3 (ADVANT)	
		70.01	=	Drive Number	
		70.02	=	Optical power/cable length (use default)	
		70.20	=	10	
		71.21	=	Star or Ring	
	Connected parameters	Main control word		(data set 10/1)	
		Speed reference		(data set 10/2)	
		Main status word		(data set 11/1)	
		Motor speed		(data set 11/2)	
		For additional p. see SW Descr. chap. ”Communication”			
AC 80	Node Type	AC 80			
	DB element	DRIENG1	Type	=	Customer string
			Ref1	=	DRIDS 1
			Position	=	Drive Number
			101 ... 112	=	17 ... 28
			201 ... 212	=	33 ... 44
			...	=	...
			701 ... 712	=	113 ... 124
	DRIDS for sending and receiving one Dataset to/from Drive				
			WR_ENA	=	1 (use ”move element”)
			ACT	=	1 (use ”move element”)
			DS_No	=	start with ten for the first dataset to be sent
			O-terminals intended for data received from drive		
			I-terminals intended for data sent to drive		
	Control word (send to drive) 7.01	=	bit10	=	1

Example for switch-on sequence

Send to control word 7.01	0476H	(ON = 0; READY, if there is no failure)
	0477H	(main contactor ON)
	047FH	(RELEASE for speed and current control)

Note: Before receiving the first dataset the drive sets the CH 0 alarm status

DCS 600 and AC 80 Drive bus

Hardware

DCS 600	SDCS-AMC-DC	board
AC 80	Drive bus	
Cable	length 0.2 ... 20 m	plastic optical fibre
Transmission speed		4Mb
Star configuration (NDBU95)		up to 12 drives - select Drive bus mode

Associated publications

DCS 600	Technical Data	3ADW000054R0301	ABB Lampertheim
	Software Description	3ADW000076R0401	ABB Lampertheim
	Database	GLOBAL\DEIND\DEIND051.NSF	
AC 80	AC 80 User manual	3BFE 64116487	
	AC 80 Reference manual	3BFE 64021737	
	Data base	GLOBAL\FIDRI\FIDRI002.NSF	

Software settings

DCS 600	Parameter	98.02	=	3 (ADVANT)	
		70.01	=	Drive Number	
		70.02	=	Optical power/cable length (use default)	
		70.20	=	10	
		71.21	=	Star	
	Connected parameters	Main control word		(data set 10/1)	
		Speed reference		(data set 10/2)	
		Main status word		(data set 11/1)	
		Motor speed		(data set 11/2)	
		For additional p. see SW Descr. chap. ”Communication”			
AC 80	Node Type	AC 80			
	DB element	DRB00	DRTYP1	=	AMC Classic for AMC DC
			DRTYP1	=	NAMC 2 for AMC DC Drive Bus
	PC element	ACSRX	DRNR	=	Drive number
			EN	=	1
			CNTRL	=	1
			DS1	=	Data set number
			WR	=	1
		Maximum two data sets in one ACSRX block AMC DC			

Example for switch-on sequence

Send to control word 7.01	0476H	(ON = 0; READY, if there is no failure)
	0477H	(main contactor ON)
	047FH	(RELEASE for speed and current control)

Note: Before receiving the first dataset the drive sets the CH 0 alarm status

DCS 600 and FCI (CI 810) / AC 400

Hardware

DCS 600	SDCS-AMC-DC	board	
FCI/AC 400	TB810	board	Software release 1.3 or later
Cable	length 0.2 ... 20 m	plastic optical fibre	
Transmission speed		4Mb	
Ring configuration		up to 12 drives	
Star configuration (NDBU95)		up to 9 drives	

Associated publications

DCS 600	Technical Data	3ADW000054R0301	ABB Lampertheim
	Software Description	3ADW000076R0401	ABB Lampertheim
	Database	GLOBAL\DEIND\DEIND051.NSF	
FCI	Functional unit part 9 DRICONE	3BSE 013947R0001	ABB Sweden
	FCB Type circuits Drives Objects	3BSE 013131R0201	ABB Sweden
	Drives FCB type circuits	3BSE013855R0001	ABB Sweden
	Adva command Drives integration	3BSE012859R0001	ABB Sweden

NOTE: Load the option ”Drive Integration”, if the operation station is installed!

Software settings

DCS 600	Parameter	98.02	=	3 (ADVANT)	
		70.01	=	Drive Number	
		70.02	=	Optical power/cable length (use default)	
		70.20	=	10	
		71.21	=	Star or Ring	
	Connected parameters	Main control word		(data set 10/1)	
		Speed reference		(data set 10/2)	
		Main status word		(data set 11/1)	
		Motor speed		(data set 11/2)	
		For additional p. see SW Descr. chap. ”Communication”			
FCI	Node Type	AC 400			
	DB element	DRIENG1	Type	=	Customer string
			Station	=	Switch at FCI
			Postion	=	Drive Number
	FB	DRI-S	For sending data sets		(10,12,14...)
		DRI-R	For receiving data set		(11,13,15...)
		[start with ten for the first dataset to be sent]			
	Control word (send to drive)	7.01 =	bit10	=	1

Example for switch-on sequence

Send to control word 7.01	0476H	(ON = 0; READY, if there is no failure)
	0477H	(main contactor ON)
	047FH	(RELEASE for speed and current control)

Note: Before receiving the first dataset the drive sets the CH 0 alarm status

DCS 600 and Profibus

Hardware

DCS 600	SDCS-AMC-DC Classic	board
NPBA02	Software V2.2	
Cable	length 0.2 ... 10 m	plastic optical fibre

Associated publications

DCS 600	Technical Data	3ADW000054R0301	ABB Lampertheim
	Software Description	3ADW000076R0401	ABB Lampertheim
	DC Converter Fieldbus	3ADW000097R0101	ABB Lampertheim (not on database)
	Database	GLOBAL\DEIND\DEIND051.NSF	
Profibus	NPBA	3AFY58995789R0125	ABB Helsinki
	Database	GLOBAL\FIDRI\FIDRI002.NSF	

Software settings

DCS 600	Parameter	98.02	=	2 (FIELDBUS)
		70.01	=	1
		70.02	=	Optical power/cable length (use default)
		70.20	=	1
	Default connected parameters	Main control word		(data set 1/1)
		Speed reference		(data set 1/2)
		Main status word		(data set 2/1)
		Motor speed		(data set 2/2)

Drive Parameter	Fieldbus Par. No.	Parameter Name	Select
51.01	1	MODULE TYPE	PROFIBUS
51.02	2	PROFIBUS MODE	DP-PPO1 or DP-PPO2
51.03	3	DRIVE NUMBER	2 to 126
51.04	4	BIT RATE SELECT PROFIBUS	9.6, 19.2, 93.75, 187.5, 500 KBIT; 1.5 MBIT; AUTO
51.05	5	DATA SET PAIRS	4 {1, 3, 5, 7 sent to drive} {2, 4, 6, 8 received from drive}
51.06	6	DATA SET OFFSET	0
51.07	7	CUT-OFF TIMEOUT	0 to 255
51.08	8	COM PROFILE	0

Note: After change of Parameters Group 51 switch OFF and ON the DCS 600 and the Fieldbus adapter!

To be continued!

= Self-adjustment while switching on

DCS 600 and Profibus: **Software settings (continued)**

Profibus (send to drive)	Control word	7.01	=	bit10	=	1

Example for switch-on sequence

Send to control word 7.01	0476H	(ON = 0; READY, if there is no failure)
	0477H	(main contactor ON)
	047FH	(RELEASE for speed and current control)

Note: Before receiving the first dataset the drive sets the CH 0 alarm status

Note:

Before sending a dataset to the drive the PLC Siemens S 7 requires a data update of the complete dataset (⇒ **Data consistency check**).

DCS 600 and Modbus PLUS

Hardware

DCS 600	SDCS-AMC-DC classic	board
NMBP-01	Software 1.3	
Cable	length 0.2 ... 10 m	plastic optical fibre

Associated publications

DCS 600	Technical Data	3ADW000054R0301	ABB Lampertheim
	Software Description	3ADW000076R0401	ABB Lampertheim
	DC Converter Fieldbus	3ADW000097R0101	ABB Lampertheim (not on database)
	Database	GLOBAL\DEIND\DEIND051.NSF	
Modbus PLUS	NMBP-01	3AFY58919802R0125RevB	ABB Helsinki
	Database	GLOBAL\FIDRI\FIDRI002.NSF	

Software settings

DCS 600	Parameter	98.02	=	2 (FIELDBUS)
		70.01	=	1
		70.02	=	Optical power/cable length (use default)
		70.20	=	1
	Default connected parameters	Main control word		(data set 1/1)
		Speed reference		(data set 1/2)
		Main status word		(data set 2/1)
		Motor speed		(data set 2/2)

Drive Parameter	Fieldbus Par. No.	Parameter Name	Select
51.01	1	MODULE TYPE	MODBUS PLUS
51.02	2	MODULE MODE	0
51.03	3	DRIVE NUMBER	2 to 64
51.04	4	GOOD MESSAGES	0 to 32767
51.05	5	BAD MESSAGES	0 to 32767
51.06	6	GLOBAL DATA OUT 1	1
51.07	7	GLOBAL DATA OUT 2	0 to 6
51.08	8	GLOBAL DATA OUT 3	0 to 6
51.09	9	GDATA IN 1STATION	1 to 64 PLC station No.
51.10	10	GDATA IN 1WORD	1

= Self-adjustment while switching on

To be continued!

DCS 600 and Modbus PLUS: Software settings (continued)

Drive Parameter	Fieldbus Par. No.	Parameter Name	Select
51.11	11	GDATA IN 2STATION	0 to 64
51.12	12	GDATA IN 2WORD	0 to 31
51.13	13	GDATA IN 3STATION	0 to 64
51.14	14	GDATA IN 3WORD	0 to 31

= Self-adjustment while switching on

Note: After change of Parameters Group 51 switch OFF and ON the DCS 600 and the Fieldbus adapter!

Modbus PLUS	Control word (send to drive)	7.01	=	bit10	=	1

Example for switch-on sequence

Send to control word 7.01	0476H	(ON = 0; READY, if there is no failure)
	0477H	(main contactor ON)
	047FH	(RELEASE for speed and current control)

Note: Before receiving the first dataset the drive sets the CH 0 alarm status

DCS 600 and CS 31

Hardware

DCS 600	SDCS-AMC-DC Classic	board
NCSA	Software V1.5	
Cable	length 0.2 ... 10 m	plastic optical fibre

Associated publications

DCS 600	Technical Data	3ADW000054R0301	ABB Lampertheim
	Software Description	3ADW000076R0401	ABB Lampertheim
	DC Converter Fieldbus	3ADW000097R0101	ABB Lampertheim (not on database)
	Database	GLOBAL\DEIND\DEIND051.NSF	
CS 31	NCSA-01	3ADW000043R0201	ABB Lampertheim

Software settings

DCS 600	Parameter	98.02	=	2 (FIELDBUS)
		70.01	=	1
		70.02	=	Optical power/cable length (use default)
		70.20	=	1
	Default connected parameters	Main control word		(data set 1/1)
		Speed reference		(data set 1/2)
		Main status word		(data set 2/1)
		Motor speed		(data set 2/2)

Drive Parameter	Fieldbus Par. No.	Parameter Name	Select
51.01	1	MODULE TYPE	NCSA-01 V1.5
51.02	2	PROTOCOL	ABB CS31
51.03	3	MODULU ID	0:WORD
51.04	4	DRIVE NUMBER	0…5 Station No.
51.05	5	ADDR WDEX	0:LOWER
51.06	6	DATA SETS	1…3 sent + receive
51.07	7	DATA SET1 CONST	1 (1 ≙ 6ms)
51.08	8	DATA SET2 CONST	1 (1 ≙ 6ms)
51.09	9	DATA SET3 CONST	1 (1 ≙ 6ms)
51.10	10	DATA SET OFSET	1

= Self-adjustment while switching on

Note: After change of Parameters Group 51 switch OFF and ON the DCS 600 and the Fieldbus adapter!

Notice: Software bug V1.5: Only one adapter in CS 31 network is too fast for drive communication!

DCS 600 and DCF 600 by FEXlink

Hardware

DCS 600	SDCS-AMC-DC or AMC-DC Classic board
DCF 601/ DCF 602	SDCS-AMC-DC or AMC-DC Classic board
Configuration	For first field exciter DCS 600 without SDCS-FEX-1 / SDCS-FEX-2 DCF 600 connection by FEXlink (X16) Maincontactor of DCF 600 controlled by armature converter (FEXlink X16) DCF 600 DI1 = H ⇒ connected to 48V DI2 = H ⇒ connected to DCF 506

Associated publications

DCS 600	Technical Data	3ADW000054R0301	ABB Lampertheim
	Software Description	3ADW000076R0401	ABB Lampertheim
	Database	GLOBAL\DEIND\DEIND051.NSF	

Software settings

DCS 600	Parameter	41.03	=	Rated field current (only used for display)
DCF 601/ DCF 602	Parameter	15.16	=	5 operation mode
	Parameter	15.21	=	1 Node = First field exciter
	Parameter	15.22	=	2 FEXlink command
	Parameter	46.07	=	3 FEXLINK
	Parameter	43.13	=	4 or higher
	Parameter	99.03	=	Rated field current of the motor

Note: Resetting of DCF 600 with FEXlink control (X16) is performed by switching OFF (DISABLE reference) and ON (ENABLE reference) again:

Control Panel key ⇒ Control Panel key

(when in LOCAL mode)

(when in LOCAL mode)

Chapter 3 - Handling of Control Panel CDP 312

3.1 Overview

The Control and Display Panel **CDP 312** [Control Panel] is used for parameter setting, for display of actual values and for drive control in ”LOCAL” mode with series **DCS 600** thyristor power converters.
This Control Panel is equipped with 16 keys and a LC display featuring 4 lines with 20 signs per line.

Panel Link

An electrical cable or an adapter serves to connect the **CDP 312** Control Panel with the RS485 interface X33 or X34 situated on the control board SDCS-CON-2 of the **DCS 600** thyristor power converter. Via this connection the Control Panel will receive all information directly from the SDCS-AMC-DC board.
The bus protocol for transmission is MODBUS.

Mounting the Panel

The **CDP 312** can be handled in three different ways:

- Direct mounting on the thyristor power converter **DCS 600**; the CDP 312 is plugged into the moulded part of the cover of the converter and connected via an adapter of approx. 45 mm.
- Mounting on the door of the switchgear cabinet using an assembly kit equipped with a connection cable.
- Use of the Control Panel as remote control device with a connection cable; recommended for start-up procedure.

Languages for Panel Display

The language for display of texts on the **CDP 312** Control Panel is English.

Note: General display texts like LAST FAULT, UPLOAD, DOWNLOAD etc. are stored in the CDP 312 Control Panel; display texts like Parameter Names, Faults etc. are taken from the Software used with **DCS 600**.

3.2 Start Mode

Note: The CDP 312 can be connected to the drive without disconnecting the auxiliary power!

When the **CDP 312** is connected and power is applied to the electronics, the display will show:

1. Name and Software version of the Control Panel; an increasing number of points (row) in the lower line will show, that data from the Software used with **DCS 600** are loaded. If this row is repeated permanently, it will not be possible to load data as (for example) there is no correct running of the Software or the SDCS-AMC-DC board is missing.

```
CDP312 PANEL   V4.24

...............
```

2. ID number and number of drives connected to the link.

```
DCS 600
ID-NUMBER       1
```

3. Afterwards the display will change over to the Actual Signal Display Mode. Now the selected values are shown here.
4. If a fault or alarm is effective, the corresponding (signal) display will appear after item 3.
   The following message is displayed if the **CDP 312** is not able to communicate with the drive:

```
**FAULT**

NO COMMUNICATION
```

```
NO COMMUNICATION [x]
```

[x]
- 1 The CDP is not active for 10 s
- 2 The drive is not active for 10 s
- 3 No data set received for 2 s
- 4 Bus administrator is offline

- The drive is not present on the link. This is the case if the drive stops communicating.
- The link does not operate because of a hardware malfunction or a cabling fault.

Action: Disconnect the CDP 312 and connect it again to the drive. Hereby the CDP 312 will be forced to the Start Mode once again!

3.3 Panel Functions

The CDP 312 has four different keypad (operation) modes:

- **Actual Signal Display Mode (ACT)**
- **Parameter Mode (PAR)**
- **Function Mode (FUNC)**
- **Drive Mode (DRIVE)** for further extensions

Actual Signal Display Mode

This keypad mode will show, depending on the drive´s history:

- Actual Signals
- Faults
- Fault History Logger

If the ACT-key is pressed immediately after initialization the following display is shown. If no panel-key of the CDP 312 is touched within one minute the Actual Signal Display will appear automatically, except when ”Status Display” or ”Speed Reference Setting” is active. (see chapter 3.13 and 3.15)

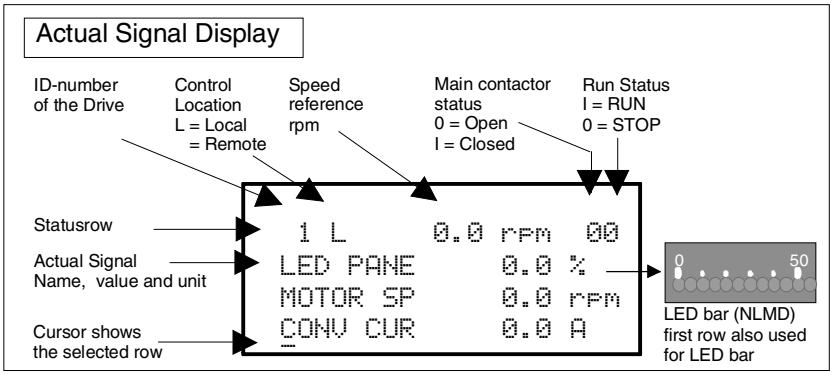

If a fault occurs in the drive, the Fault Display will appear automatically. This will happen with all other modes as well, except the Drive Mode is active.

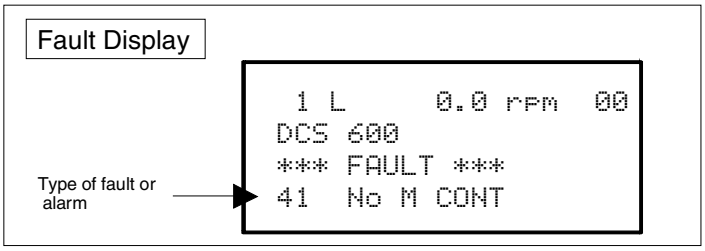

To select Fault History Display see chapter 3.8

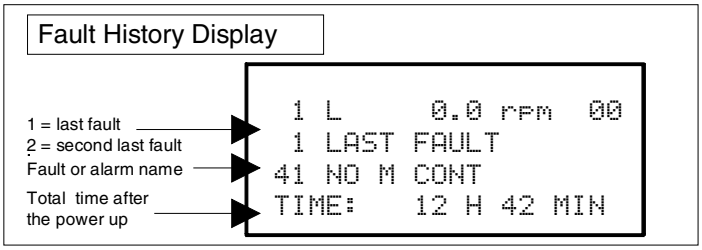

Note: For correct display of the **LED bar** select always **1.26** to the first row of CDP 312 (default) and select desired signal at **18.01**.

Parameter Mode

The Parameter Mode is used for:
- showing signals and their actual status
- showing parameters and changing values of parameters, if they are not write-protected.

When the Parameter mode is entered Parameter **[P 13.01]** appears after initialization, otherwise the finally selected parameter is shown.

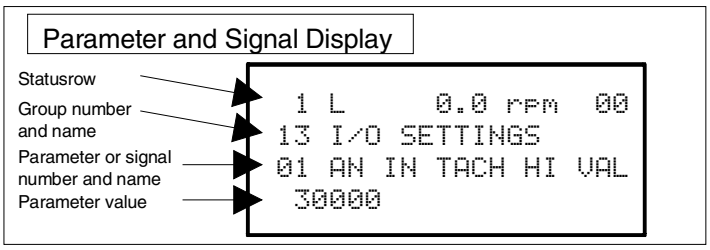

The firmware consists of a fixed structure. Modifications can be done by:

- **Pointers** for designating connections
- **Parameters** for setting values, such as ramp-up / ramp-down time, controller´s gain, reference values, etc.

If a write-protected parameter is selected, the following warning will be displayed:

```
**WARNING**
WRITE ACCESS DENIED
PARAMETER SETTINGS
NOT POSSIBLE
```

Function Mode

The Function mode is used for special functions, such as:

- Parameter **UPLOAD** (Group 0 ... 100) from drive to CDP 312
- Parameter **DOWNLOAD** (Group 0 ... 100) from CDP 312 to drive
- CDP 312 display contrast setting

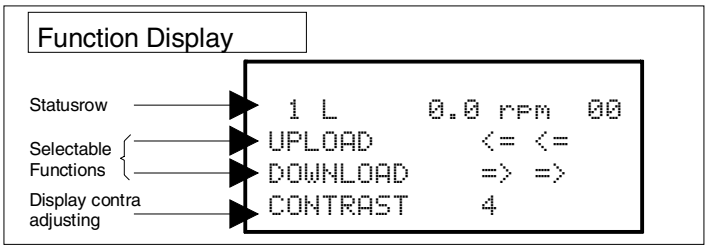

Drive Mode

Drive mode is used to check the drive configuration. The display will show the type and ID-number of the drive to whom the **CDP 312** is connected to as well as the status of the drives; for more details see chapter 3.13 Drive Mode.

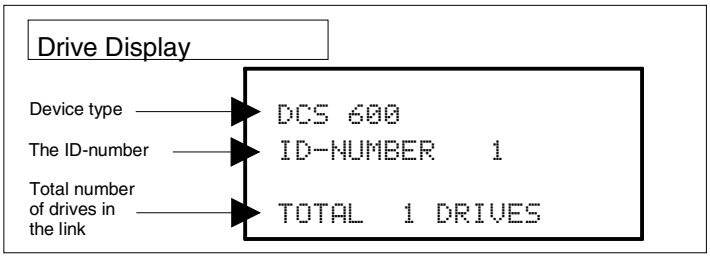

Reference Input

The Reference Button activates one reference signal sent to drive if drive is:

- in local mode
- in the running status (enable reference)

The meaning and limitation of this signal depends on the Drive Mode.

Drive Mode	Reference (input)	Reference (displayed)	Limitation
Speed control	Local Ref 1	SPEED REF 3	20.01 20.02
Torque control	Torq Ref B	TORQ REF 1 Selector 20.01	20.09 20.10
Fex mode	Cur REF 1	Local REF 3 Selector 15.16	20.12 20.13

3.4 Parameter Selecting and Changing of Value

For Parameter selection with the CDP 312 the following applies:

- Ignore the two right-hand digits; the remaining digits are the **Group** and are selected at the panel using keys ⏫ / ⏬.
- The two right-hand digits are the **Index** and are selected at the panel, using the keys ▲ / ▼, e.g.:

Parameter	⇒	Group	Index
13.01	⇒	13	01 (resp. 1)
1.26	⇒	1	26

Step	Function	Press key	Display after key is pressed
1.	To enter the **Parameter Mode** Selection	PAR	1 L 0.0 rpm 00 13 I/O SETTINGS 01 AN IN TACH HI VAL 30000
2.	To select another group. While pressing the key down, only the Group number and name is displayed. When the key is released, number, name and value of the first parameter in the Group are displayed.	⏫ ⏬	1 L 0.0 rpm 00 21 START / STOP 03 LOCAL STOP MODE RAMP STOP

Table to be continued!

Table (continued): *Parameter Selecting and Changing of Value*

Step	Function	Press key	Display after key is pressed
3.	To select an Index. While pressing the key down, only the Index number and name is displayed. When the key is released the value of the Index is also displayed.	▲ ▼	1 L 0.0 rpm 00 21 START / STOP 04 EME STOP MODE 1 L 0.0 rpm 00 21 START / STOP 04 EME STOP MODE RAMP STOP
4.	To select the Parameter value (for changing).	ENTER	1 L 0.0 rpm 00 21 START / STOP 04 EME STOP MODE [RAMP STOP]
5a.	To change the **Parameter value** by scrolling**:** (slow change) (fast change)	▲ ▼ ⏫ ⏬	1 L 0.0 rpm 00 21 START / STOP 04 EME STOP MODE [TORQUE LIMIT]
5b.	To change the **Pointer connection** by scrolling at first: (Group number) --->** then: (Index number) --->** of the target.	⏫ ⏬ ▲ ▼	1 L 0.0 rpm 00 94 CON2 COMMUNICATI 01 INDX ACT 01 / 2ms [307]
6a.	To confirm / send the new value to the drive (to finish the changing procedure).	ENTER	1 L 0.0 rpm 00 21 START / STOP 04 EME STOP MODE TORQUE LIMIT
6b.	To cancel the new setting and keep the original value press any of the four keys. The selected Keypad Mode is entered.	ACT PAR FUNC DRIVE	1 L 0.0 rpm 00 21 START / STOP 04 EME STOP MODE RAMP STOP

3.5 Saving of the Parameters to backup memory

(in case of control board exchange)

In general all changed Parameters will be saved immediately in the non-volatile memory. That is why no separate saving is required.

Exception: In case of a control board exchange (SDCS-CON-2/SDCS-AMC-DC) the detected hardware coding has to be saved to the FPROM (backup memory).
Note: For thyristor power converters **DCS 600** of size C4 ($I_{rated} \geq 2050$ A).the rated values etc. (Param. **[P 42.07]** to **[P 42.11]**) have to be entered before saving them to the FPROM; see chapter 2.2 ”Scaling intra-unit signals”.

NOTE: For Software downloading observe the relevant instructions given on the ”read_me” file of the corresponding Software disc!

Step	Function	Press key	Display after key is pressed
1.	To enter the **Parameter Mode** Selection	PAR	1 L 0.0 rpm 00 13 I/O SETTINGS 01 AN IN TACH HI VAL 30000
2.	To select Group 15. While pressing the arrow down, only the Group number is displayed. When the key is released, number, name and value of the first parameter in the Group is displayed.	▲▲ ▼▼	1 L 0.0 rpm 00 15 DRIVE LOGIC PAR 01 MAINCONT CON MODE 1 L 0.0 rpm 00 15 DRIVE LOGIC PAR 01 MAINCONT CON MODE ON
3.	To select Index 02 from Group 15. While pressing the arrow down, only the signal name and number are displayed. When the key is released the value is also displayed.	▲ ▼	1 L 0.0 rpm 00 15 DRIVE LOGIC PAR 02 DRIVE MODE 1 L 0.0 rpm 00 15 DRIVE LOGIC PAR 02 DRIVE MODE 0
4.	For activating press ENTER.	ENTER	1 L 0.0 rpm 00 15 DRIVE LOGIC PAR 02 DRIVE MODE [0]
5.	To select **22** for saving of changed values. **Table to be continued!**	▲ ▼	1 L 0.0 rpm 00 15 DRIVE LOGIC PAR 02 DRIVE MODE [22]

Table (continued): ***Saving of the Parameters to backup memory***

Step	Function	Press key	Display after key is pressed
6a.	Confirmation of the saving. Saving procedure is completed when **0** is displayed.	ENTER	1 L 0.0 rpm 00 15 DRIVE LOGIC PAR 02 DRIVE MODE 22
6b.	To cancel the saving and keep the original value press any of the four keys. The selected Keypad Mode is entered.	ACT PAR FUNC DRIVE	1 L 0.0 rpm 00 15 DRIVE LOGIC PAR 02 DRIVE MODE 0

3.6 FAULT resetting (RESET)

FAULT resetting is possible in both LOCAL and REMOTE mode of the drive.

Step	Function	Press key	Display after key is pressed
1.	To enter the **Actual Signal Display Mode**	ACT	1 L 0.0 rpm 00 DCS 600 *** FAULT *** 41 NO M CONT
2.	To RESET the FAULT	RESET	1 L 0.0 rpm 00 LED PANE 0.0 % MOTOR SP 0.0 rpm CONV CUR 0.0 A

3.7 EMERGENCY STOP resetting (RESET)

Resetting (RESET) of the EMERGENCY STOP function is not required with **DCS 600**. If the EMERGENCY STOP command is cancelled, there will be a self-resetting routine of the corresponding signal. For restart a switch ON command (signal) with 0 -> 1 edge has to be used.

3.8 Fault History Display

Up to 24 faults are stored time related and displayed together with the time they appeared after electronics supply switched on.

Step	Function	Press key	Display after key is pressed
1.	To enter the **Actual Signal Display Mode**	ACT	1 L 0.0 rpm 00 LED PANE 0.0 % MOTOR SP 0.0 rpm CONV CUR 0.0 A
2.	To enter the Fault History Display. These keys also scroll the screen from **Actual Signal Display** to **Fault Display**, to **Fault History Display** back to **Actual Signal Display**.	⏫ ⏬	1 L 0.0 rpm 00 1 LAST FAULT 41 NO M CONT TIME: 14 H 33 MIN
3.	To select newer (UP) or older fault (DOWN).	▲ ▼	1 L 0.0 rpm 00 2 LAST WARNING 02 EMER STOP TIME: 14 H 29 MIN
4.	To return to the **Actual Signal Display Mode**.	⏫ ⏬	1 L 0.0 rpm 00 LED PANE 0.0 % MOTOR SP 0.0 rpm CONV CUR 0.0 A

3.9 Uploading and Downloading of Parameters (UPLOAD/DOWNLOAD)

CAUTION! The drive must be in standstill condition with given STOP command (controllers blocked, power section disconnected from the network) when ***UPLOAD/ DOWNLOAD*** function is selected.
The upload and download function is operative for groups 10…97

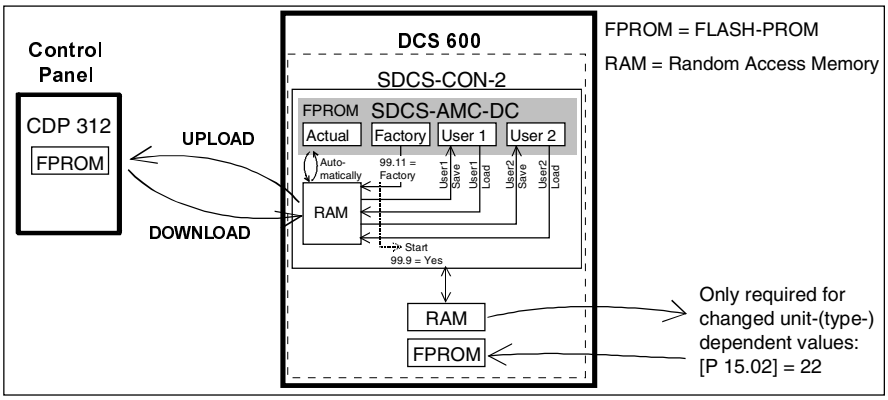

UPLOAD will copy all parameters, which are different to default, from the **RAM** memory of the SDCS-AMC-DC board to the **FPROM** memory of the Control Panel CDP 312.

Before a ***DOWNLOAD*** is started the factory-set values (default values) should be available within the **RAM** memory of the SDCS-AMC-DC board. Factory-set values are always available in the **FPROM** memory of this board and they can be called by means of **APPLIC_RESTORE** parameter **99.09** with the exception of the group 99. Parameter **99.11 APPLICATION MACRO** has to be set to **FACTORY**.
The exceptional group has to be checked and if necessary, changed by manual setting. Instead of this a saved default parameter set can be loaded by DRIVES WINDOW.
The ***DOWNLOAD*** will copy all values stored in the **FPROM** memory of the CDP 312 to the **RAM** memory of the SDCS-AMC-DC board.

Note: For reasons of safety the ***DOWNLOAD*** function will only operate if “**LOCAL** mode” of the Control Panel CDP 312 is selected!

Depending on the drive´s condition and the status of the commissioning, ***UPLOAD*** has to take place before ***DOWNLOAD***, otherwise a warning may be displayed:

```
**WARNING**
NOT UPLOADED
DOWNLOADING
NOT POSSIBLE
```

The drive must be in stopped state during the ***DOWNLOAD*** process, otherwise the following warning is displayed.

```
**WARNING**
DRIVE IS RUNNING
DOWNLOADING
NOT POSSIBLE
```

The drive that receives the ***downloaded*** parameters must have a compatible software version to the drive from which the parameters were ***uploaded***. Otherwise the panel will display a warning:

```
**WARNING**
DRIVE INCOMPATIBLE
DOWNLOADING
NOT POSSIBLE
```

Step	Function	Press key	Display after key is pressed
1.	To enter the **Function Mode**	FUNC	1 L 0.0 rpm 00 UPLOAD <= <= DOWNLOAD => => CONTRAST 4
2.	To select a function.	▲ ▼	1 L 0.0 rpm 00 UPLOAD <= <= DOWNLOAD => => CONTRAST 4
3.	To activate the selected function.	ENTER	1 L 0.0 rpm 00 => => => => => => => DOWNLOAD
4.	Loading complete.		1 L 0.0 rpm 00 LED PANE 0.0 % MOTOR SP 0.0 rpm CONV CUR 0.0 A

3.10 Setting of the Display Contrast

Step	Function	Press key	Display after key is pressed
1.	To enter the **Function Mode**.	FUNC	1 L 0.0 rpm 00 UPLOAD <= <= DOWNLOAD => => CONTRAST 3
2.	To select a function.	▲ ▼	1 L 0.0 rpm 00 UPLOAD <= <= DOWNLOAD => => CONTRAST 3
3.	To enter contrast setting function.	ENTER	1 L 0.0 rpm 00 CONTRAST [3]
4.	To set the contrast. (1...7)	▲ ▼	1 L 0.0 rpm 00 CONTRAST [6]
5.	To accept the selected value.	ENTER	1 L 0.0 rpm 00 UPLOAD <= <= DOWNLOAD => => CONTRAST 6

3.11 Full Name of Actual Signals

Step	Function	Press key	Display after key is pressed
1.	To display the full name of the three actual signals press key and hold.	ACT	1 L 0.0 rpm 00 LED PANEL OUTPUT MOTOR SPEED CONV CUR ACT
2.	To return to the **Actual Signal Display Mode** release key.	ACT	1 L 0.0 rpm 00 LED PANE 0.0 % MOTOR SP 0.0 rpm CONV CUR 0.0 A

3.12 Selection of Actual Signals Group 1 ... 9

Note:
The selection of actual signals will remain unchanged even if the unit is switched OFF and ON again.

Please observe: if the actual signal Parameter is within the software part of the SDCS-CON-2 board, the selected actual signal has to be entered in the Group 94.

Step	Function	Press key	Display after key is pressed
1.	To enter the **Actual Signal Display Mode**	ACT	1 L 0.0 rpm 00 LED PANE 0.0 % MOTOR SP 0.0 rpm CONV CUR 0.0 A
2.	To select the desired line.	▲ ▼	1 L 0.0 rpm 00 LED PANE 0.0 % MOTOR SP 0.0 rpm CONV CUR 0.0 A
3.	To get acces to the desired line.	ENTER	1 L 0.0 rpm 00 1 ACTUAL VALUES 16 CONV CUR ACT 0.0 A
4.	To select a different group.	⏫ ⏬	1 L 0.0 rpm 00 2 ACTUAL VALUES 01 LIMITED SPEED REF 0.0 rpm
5.	To select a Index.	▲ ▼	1 L 0.0 rpm 00 2 ACTUAL VALUES 03 SPEED DIFFERENCE -0.0 rpm
6.	To accept the selection and to return to the **Actual Signal Display Mode**.	ENTER	1 L 0.0 rpm 00 LED PANE 0.0 % MOTOR SP 0.0 rpm SPEED DI -0.0 %

3.13 Drive Mode

Display of the ID-number for the Drive and for the Control Panel CDP 312 as well as display of the status **(Status Display)**:

Step	Function	Press key	Display after key is pressed
1.	To enter the **Drive Mode**	DRIVE	DCS 600 ID-NUMBER 1 TOTAL 10 DRIVES
2.	To select the **Status Display** (see table below): To change the ID number of the drive (the ID-Number will appear in brackets) and then ... to select the new value. To accepted the new value. The power of the DCS 600 must be switched OFF to validate its new ID-Number setting (the new value is not displayed until the power is switched OFF and ON). The Status Display of all drives connected to the Panel Link is shown after the last individual drive. If all drives do not fit on the display at once, press the arrow keys to show the rest of them.	ENTER ▲ ▼ ENTER ⏫ ⏬	DCS 600 ID-NUMBER [1] TOTAL 10 DRIVES 1 2 3 4 5 6 7 8 9 10
3.	To cancel the **Drive Mode**. The selected Keypad Mode is entered.	ACT PAR FUNC DRIVE	

Table: Symbols of Status Display

Symbol	Status Display
	Stopped, main contactor OFF (open)
	Stopped, main contactor ON (closed)
	Running, main contactor ON (closed)
	Alarm or fault signalling effective in the drive

3.14 Running the Drive

Operational Command Keys

Operational commands can be given from the Control Panel CDP 312 every time when the status row is displayed. Operational commands include START and STOP of the the drive, controlling the main contactor and adjusting the reference.

CAUTION! To be able to give operational commands from the CDP 312, the selected control location must be the Control Panel. The control location can be changed by means of **LOC/REM** key to **LOCAL** mode.

If **LOCAL** mode is activated some of the binary inputs are no longer functioning.

Take care that the drive is engineered to allow operation with **LOCAL** mode.

Control Panel Key	Name of Key	Function
LOC REM	LOCAL / REMOTE	To select LOCAL (= CDP 312) or REMOTE (= ext. control system) operation.
	START	Starts the drive, when in LOCAL mode.
	STOP	Stops the drive, when in LOCAL mode.
	ON	Main contactor closing control, when in LOCAL mode.
	OFF	Main contactor opening control, when in LOCAL mode.

Running the DC-Drive from the CDP 312

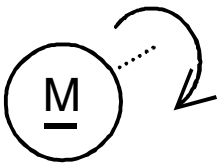

Ensure safety before you start the drive test!

- Select LOCAL mode (**LOCAL** = CDP 312) by pressing LOC/REMOTE key.
- Close (switch on) the main contactor by pressing the **ON** key
- Start the drive by pressing the **START** key. Presetting of a reference value for the motor will now be possible.
- Direction of rotation can be changed by presetting the opposite polarity of reference value in case of 4Q drive.
- Stop the drive by pressing the **STOP** key. Motor will decelerate to zero speed (depending on the parameter LOCAL STOP **[P 21.03]**)
- Finally open (switch off) the main contactor by pressing the **OFF** key.

3.15 Speed Reference Setting for the Drive

Step	Function	Press key	Display after key is pressed
1.	Press one of these keys to get the status row displayed.	ACT PAR FUNC	1 L 0.0 rpm II LED PANE 0.0 % MOTOR SP 0.0 rpm CONV CUR 0.0 A
2.	To enter the **Reference Setting Mode**	REF	1 L [0.0 rpm] II LED PANE 0.0 % MOTOR SP 0.0 rpm CONV CUR 0.0 A
3.	To change the reference: (slow change) (fast change)	▲ ▼ ⏶ ⏷	1 L [500.0 rpm] II LED PANE 0.0 % MOTOR SP 0.0 rpm CONV CUR 0.0 A
4.	To exit the **Reference Setting Mode**. The selected Keypad Mode is entered.	ACT PAR FUNC DRIVE	1 L 500.0 rpm II LED PANE 0.0 % MOTOR SP 0.0 rpm CONV CUR 0.0 A

4.1 Display of status, alarm and fault signals

Categories of signals and possibilities of display

The signals (messages) to be available for thyristor power converters series **DCS 600** are subdivided into four (fifth category see below) categories:

8	General messages
E 2	Starting errors
F	Fault signals
A	Alarm signals

A seven segment display on the control board SDCS-CON-2 of the thyristor power converters series **DCS 600** is used to show general messages, starting errors, fault and alarm signals.
The signals (messages) are displayed as codes. If the codes consist of several parts, the characters/individual digits will be indicated for 0.7 sec one after the other, e.g.:

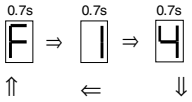

F 14 = Speed measurement fault

In addition to this the **DCS 600** combined with the LCD of the control panel CDP 312 will be able to show the fault and alarm signals as numbers with text as well as the status signals (selected in Actual Signal Display Mode [⇒ **ACT**-key] by signal group **1..xx ... 9.xx**).

For subsequent evaluation via binary outputs or serial interfaces the 16 bit informations **FAULT WORD1 [9.01], FAULT WORD2 [9.02]** and **FAULT WORD3 [9.06]** as well as **ALARM WORD1 [9.04]** and **ALARM WORD2 [9.05]** contain several fault and alarm signals as a binary code.

4.2 General messages

From SDCS-CON-2 board

The general messages will only be shown on the seven segment display/LEDs of the boards SDCS-CON-2/SDCS-AMC-DC.

Code seven segm. display	Text on LCD of control panel CDP 312 (or DRIVES WINDOW)	Definition	–	Remark
8	Not available	Program is not running [SDCS-CON-2]	–	(1)
.	Not available	Normal situation, no fault / no alarm signal	–	
L	Not available	Indication while loading another firmware into the control board SDCS-CON-2	–	

From SDCS-AMC-DC board

LED	Definition	Remark
green	Software running	SDCS-AMC-DC Software under operation
red	Fault	Fault occured; Fault and Alarm Words ⇒ group 6, 9

4.3 Starting errors (E) [from SDCS-CON-2 board]

The starting errors will only be shown on the seven segment display of the control board SDCS-CON-2.

With starting errors it will not be possible to start the drive.

Code seven segm. display	Text on LCD of control panel CDP 312 (or DRIVES WINDOW)	Definition	–	Remark
E1	Not available	ROM memory test error [SDCS-CON-2]	–	(1)
E2	Not available	RAM memory test error [SDCS-CON-2]	–	(1)
E5	Not available	No control program in memory [SDCS-CON-2]	–	(2)
E6	Not available	Hardware is not compatible [SDCS-CON-2]	–	(1)

(1) Units should be switched off and on electrically; if fault occurs again, the PCBs SDCS-POW-1 and SDCS-CON-2 have to be checked and if necessary to be changed.

(2) Load firmware once more.

4.4 Fault Signals (F)

The fault signals will be shown on the seven segment display of the control board SDCS-CON-2 as codes **F . .** as well as on the LCD of the control panel CDP 312 as numbers with text. Moreover there are fault signals which will only be shown on the LCD of the control panel.

All fault signals - with the exception of **F 17**, **F 20** and **F 44** - can be reset (after elimination of the faults).

For resetting (RESET) of fault signals the following steps are required:

- Switching off the commands ON/OFF and RUN
- Elimination of the faults
- Fault acknowledgement, i.e. resetting (RESET) through input of the command RESET with APC or in ”LOCAL” mode with control panel CDP 312/DRIVES WINDOW.
- Depending on the application conditions generate the commands ON/OFF and RUN once more.

The fault signals will result in tripping the drive (installation-dependent).

If a fault occurs, there will be three different possibilities of reaction (see column ”Remark” in the fault list):

(1) *Fault will switch off the signals energizing the main contactor, the field contactor and the fan contactor.*
(2) *Fault will switch off the signals energizing the main contactor and the field contactor.*
(3) *Fault will switch off the signal energizing the main contactor.*

Code seven segm. display	Text on LCD of control panel CDP 312 (or DRIVES WINDOW)	Definition / Action	Status signal (FAULT_WORD_ 1/2/3)		Remark
F 1	01 AUX UVOLT	**Auxiliary voltage fault** The auxiliary voltage (230 V) is too low while the drive is in operation. If resetting fails, check internal auxiliary voltages. If fault persists, change SDCS-CON-2 and/ or SDCS-POW 1 board (if required).	**9.01**	**bit 0**	(1)
F 2	02 OVERCURR	**Overcurrent** Check: - Motor, load and armature cabling for faults or blocking condition; - Parameter setting of current control circuit/torque limitation; - Parameter **[P 42.05]** (overcurrent detection). - Faulty thyristor	**9.01**	**bit 1**	(3)

Code seven segm. display	Text on LCD of control panel CDP 312 (or DRIVES WINDOW)	Definition / Action	Status signal (FAULT_WORD_ 1/2/3)		Remark
F 3	03 C FAN CURR	**Overcurrent converter fan only in combination 42.14 ≠ 0** Check setting: - Current converter fan - PW 1002 /PW 1003 - Parameter **[P 42.19]** - Parameter **[P 42.14]** - Monitor **[4.14]**	**9.01**	**bit 10**	(1)
F 4	04 CONV TEMP	**Overtemperature power section** Check: - Fan supply, direction of rotation, fan components, air inlet and ambient temperature; - Inadmissible load cycle? - connector X12 on SDCS-CON-2	**9.01**	**bit 3**	(2)
F 5	05 EARTH FLT	**Earth fault (Σ I_{L1},I_{L2},I_{L3} differs from zero)** Disconnect the mains and verify zero voltage in armature and field circuits. Make insulation test for the complete installation. Check sum current transformer; if necessary, change transformer and SDCS-IOB-3 board.	**9.01**	**bit 4**	(1)
F 6	06 MOT1 TEMP	**Overtemperature of MOTOR 1** Check: - Temperature sensor and its cabling; - Motor cooling or sizing; - Inputs for temperature sensor on board SDCS-IOB-3; - Param. setting **[P 28.11]** correct?	**9.01**	**bit 5**	(2)
F 7	07 MOT1 LOAD	**Overload of MOTOR 1** (Thermal model **1**) Check: - Motor temperature (let motor cool down and restart); - Motor ratings and parameters of thermal model; - Motor sizing or load cycle; - Param. setting **[P 28.04]** correct?	**9.01**	**bit 6**	(2)

Code seven segm. display	Text on LCD of control panel CDP 312 (or DRIVES WINDOW)	Definition / Action	Status signal (FAULT_WORD_ 1/2/3)		Remark
F 14	14 SPD MEAS	**Speed feedback (measurement) fault** Check: - Incremental encoder and connection cable, encoder power supply (feedback might be too low); - Tacho polarity and voltage (does a total mismatch exist?) - Position of jumper S4 on board SDCS-CON-2 O.K.? - Electronic boards SDCS-CON-2, SDCS-IOB-3, SDCS-POW 1; - Connection converter – armature circuit open? - Correct setting for selection of speed feedback monitoring?	**9.02**	**bit 5**	(3)
F 17	17 TYPE CODE	**(Converter) Type coding fault** SDCS-PIN-xx board not connected to board SDCS-CON-2 or SDCS-PIN-xx not coded. Check: - Flat cables X12 and X13 O.K.? - Faulty coding on SDCS-PIN-xx? - New boards SDCS-CON-2/SDCS-AMC-DC installed? - Correct coding of unit size **C4**?	**9.02**	**bit 8**	(1) Can not be reset
F 18	18 CON FLASH	**Memory fault on SDCS-CON-2 board (Parameter saving fault)** Cause: Wrong or missing checksum, data error while writing or reading. **Note:** Try again saving of type coding; for that purpose - Move jumper **S2** (on board SDCS-CON-2) to Pos. 1–2 with electronics supply switched OFF; - Switch ON electronics again; - Select **[P 15.02] = 22**; - Save default parameter set; - Switch OFF electronics; - Reset jumper **S2** to ist original position; - Switch ON electronics again. If display shows **F 18** once again, change SDCS-CON-2 board!	**9.06**	**bit 14**	(1) Can not be reset
F 20	20 CON-SYSTEM FAULT	**CON-SYSTEM FAULT** This fault is shown after downloading the software of the SDCS-AMC-DC board. The auxiliary voltage (230 V) has to be switched OFF and ON again.	**9.06**	**bit 15**	(1) Can not be reset

Code seven segm. display	Text on LCD of control panel CDP 312 (or DRIVES WINDOW)	Definition / Action	Status signal (FAULT_WORD_ 1/2/3)		Remark
F 23	23 MOT STALL	**Motor stalled** While starting the motor the current exceeded the value of parameter **[P 28.17]** for a time longer than parameter **[P 28.15]** and the speed feedback value was below parameter **[P 28.16]**. Check: - Motor stalled? - Load changed during start? - Correct field current? - Current/torque limitation; - Parameter settings **[P 15.08]**.	**9.02**	**bit 14**	(3)
F 27	27 MOT2 LOAD	**Overload of MOTOR 2** (Thermal model **2**). {see Fault Code **F 7**}	**9.01**	**bit 9**	(2)
F 28	28 ARM OVOLT	**Armature (DC circuit) overvoltage** Check: - Setting of param. **[P 28.22]** suitable for the system configuration? - Setting of field current and actual value as well as the complete field supply (FIELD EXCITER); - Was the motor accelerated by the load? - Speed scaling; - Armature voltage feedback; - Connections between SDCS-CON-2 and SDCS-PIN boards; - Coding of voltage evaluation on SDCS-PIN-xx board.	**9.01**	**bit 2**	(1)
F 29	29 MAIN UVLT	**Mains supply undervoltage (AC)**; setting via parameters **[P 40.01]** or/ and **[P 40.02]** Check: - Is the mains voltage within the admissible tolerance? - Did the mains contactor close and open? - Voltage scaling via parameter **[P 42.06]** rated line voltage correct? - Connections between SDCS-CON-2 and SDCS-PIN-xx boards; - Coding of voltage measurement on SDCS-PIN-xx board.	**9.01**	**bit 11**	(3)

Code seven segm. display	Text on LCD of control panel CDP 312 (or DRIVES WINDOW)	Definition / Action	Status signal (FAULT_WORD_ 1/2/3)		Remark
F 30	30 MAIN OVLT	**Mains supply overvoltage (AC)** Mains voltage > 130% of nominal value (parameter **[P 42.06]**) for longer than 10s. Fault tracing see Fault Code **F 29**.	**9.01**	**bit 12**	(1)
F 31	31 NO SYNC	**Synchronization fault (of mains)** Check: - Mains supply, fuses etc.; - Mains voltage and stability.	**9.01**	**bit 13**	(3)
F 32	32 FEX1 OCUR	**FIELD EXCITER 1 (field supply 1) overcurrent** Check: - **FIELD1_OVERCUR_LEV** (parameter **[P 20.16]**); - Connections of field exciter as well as insulation level of cable and of field winding.	**9.01**	**bit 14**	(1)
F 33	33 FEX1 COMM	**FIELD EXCITER 1 communication error** Check: - Flat cable connections X14: or cable X16: between SDCS-CON-2 board and field exciter; - Auxil. voltage for ext. field exciter.	**9.01**	**bit 15**	(1)
F 34	34 CURR RIPP	**Armature current ripple** One or several thyristors carry no current. Check: - Current feedback with oscilloscope (6 pulses within one cycle visible?); - Branch fuses, thyristor gate connection and gate-cathode resistance; - See also parameters **[P 43.10]**, **[P 43.11]**, and **[P 43.12]**	**9.02**	**bit 0**	(3)
F 35	35 FEX2 OCUR	**FIELD EXCITER 2 (field supply 2) overcurrent** Check: - **FIELD2_OVERCUR_LEV** (parameter **[P 20.17]**); - Connections of field exciter as well as insulation level of cable and of field winding.	**9.02**	**bit 1**	(1)
F 36	36 FEX2 COMM	**FIELD EXCITER 2 communication error** {See Fault Code **F 33**}	**9.02**	**bit 2**	(1)

Code seven segm. display	Text on LCD of control panel CDP 312 (or DRIVES WINDOW)	Definition / Action	Status signal (FAULT_WORD_ 1/2/3)		Remark
F 37	37 OVERSPEED	**Motor overspeed** Speed feedback higher than parameter **[P 20.11]**. Check: - Scaling of speed controller loop; - Drive speed; - Field refererence values; - Speed feedback and connection of speed feedback; - Was the motor accelerated by the load?	**9.02**	**bit 15**	(3)
F 38	38 PHAS SEQU	**Phase sequence fault of power section** Change supply phase sequency or make correction with parameter **[P 42.01]**. **Attention**: Direction of rotation of 3-phase fan correct?	**9.02**	**bit 3**	(3)
F 39	39 NO FIELD	**No field acknowledge from FIELD EXCITER** Check: - Do selection parameters match the field exciter (field supply)? - Field exciter supply, cable and field winding; - Status/level of acknowledge signal.	**9.02**	**bit 4**	(1)
F 40	40 NO E FAN	**No acknowledge from FAN of motor** Check: - Contactor circuit/supply for fan of motor; - Status of binary inputs/outputs (DI2/DO1) on SDCS-IOB-2/ SDCS-CON-2 boards; - Parameter setting **[P 15.07]**.	**9.02**	**bit 6**	(1)
F 41	41 NO M CONT	**Missing main contactor acknowledge** Check: - Switch-ON/-OFF sequence correct? - Status of binary input DI3 for acknowledge signal ACK_M_CONT of main contactor; - Status of binary output DO3 resp. of auxiliary contactor (relay) closing the main contactor after ON/OFF command.	**9.02**	**bit 7**	(3)

Code seven segm. display	Text on LCD of control panel CDP 312 (or DRIVES WINDOW)	Definition / Action	Status signal (FAULT_WORD_ 1/2/3)		Remark
F 42	42 FEX1 FLT	**FIELD EXCITER 1 (field supply 1) fault** A fault was found during self-diagnosis of field exciter. Check: - Field exciter operation; change the unit, if necessary; - Field 1/Field 2 coding O.K.?	**9.02**	**bit 12**	(1)
F 43	43 FEX2 FLT	**FIELD EXCITER 2 (field supply 2) fault** {See Fault Code **F 42**}	**9.02**	**bit 13**	(1)
F 44	44 NO I/O	**Missing input/output (I/O-) board** Check: - Correct selection of SDCS-IOB-2/3 board (see also param. **[P 98.08]**) - Is +/- 10 V supply available? - Flat cable connections between SDCS-CON-2 and SDCS-IOB-2/3 boards.	**9.01**	**bit 7**	(1)
F 48	48 MOT2 TEMP	**Overtemperature of MOTOR 2** Check: - Parameter setting **MOT_2_TEMP_ FAULT_L [P 28.14]** correct? {See Fault Code **F 6**}	**9.01**	**bit 8**	(2)
F 50	50 NO C FAN	**No CONVERTER FAN supply acknowledge** Depending on type of unit (size): Size C4 ⇒ Fault signal **F 50** Sizes C1...C3 ⇒ Alarm signal **A 126** Check: - Was input for acknowledge signal DI1 used?	**9.02**	**bit 10**	(2)
F 65	65 REVER FLT	**Zero current signal not reached within 6.6 ms** Very fast current rise ramp: - increase parameter 47.07	**9.06**	**bit 0**	(3)
F 66	66 CURR DIFF	**Current difference in 12-pulse parallel operation** Check: - Setting of master and slave current controller - increase parameter 47.04	**9.06**	**bit 1**	(3)
F 67	67 12P COMM	**Open 12-pulse fibre optic link (V260)**	**9.06**	**bit 2**	(3)
F 68	68 SLAVE DIS	**Fault of 12-pulse master.** **Master tripped by a fault of the 12-pulse slave.** Check: - Fault logger of 12-pulse slave	**9.06**	**bit 3**	(3)

Fault Signals referring to the SDCS-AMC-DC board

Code seven segm. Display	Text on LCD of control panel CDP 312 (or DRIVES WINDOW)	Definition / Action	Status signal (FAULT_WORD_ 1/2/3)		Remark
— *)	RESET FAULT	**RESET of all faults which can be acknowl-edged**			
— *)	SYSTEM FAULT	**Fault of the SDCS-AMC-DC board** Fault of the operating system.	**9.06**	**bit 7**	
— *)	CON COMMUNIC	**Communication fault between the SDCS-AMC-DC board and the SDCS-CON-2 board**	**9.06**	**bit 10**	Can not be reset
— *)	CH0 COMMUN	**Communication fault with fieldbus, APC** or **fieldbus adapters** If this signal has to be effective only as an alarm (warning) signal, the mode of functioning can be changed by setting the parameter **CH0_COM_LOSS_CTRL [P 70.05]**. Check: - Optical fibre cable connections; - APC, PLC and **adapter**s ready for operation?			

*) No Fault Code available on seven segment display!

Code seven segm. display	Text on LCD of control panel CDP 312 (or DRIVES WINDOW)	Definition / Action	Status signal (FAULT_WORD_ 1/2/3)		Remark
— *)	M/F LINK	**Communication fault in the Master-Follower-link** If this signal has to be effective only as an alarm (warning) signal, the mode of functioning can be changed by setting the parameter **CH2_COM_LOSS_CTRL [P 70.14]**. Check: - Optical fibre cable connections.	**9.06**	**bit 11**	
— *)	PANEL LOSS	**Connection fault to the Control Panel CDP 312 or DRIVES WINDOW** Check: - Control Panel CDP 312 disconnected? - Connection adapter or cable damaged? - Communication problems using the program DRIVES WINDOW in ”LOCAL” mode?	**9.06**	**bit 13**	
— *)	EXT FAULT	**External fault at binary input (DI) selected by Parameter [P 15.23]** An external fault is activated by a ”Low signal” at the binary input (DI) selected by Parameter **[P 15.23].**	**9.02**	**bit 9**	
— *)	SW MISMATCH	**Software versions loaded to SDCS-CON-2 and SDCS-AMC-DC do not match** see *DCS 600 Software release notice*	**9.06**	**bit 9**	

*) No Fault Code available on seven segment display!

4.5 Alarm Signals (A)

The alarm signals will be shown on the seven segment display of the control board SDCS-CON-2 as codes **A . . .** On the LCD of the control panel CDP 312 the alarm signals will be shown as numbers (without the leading digit ”1”) with text.

Code seven segm. display	Text on LCD of control panel CDP 312 (or DRIVES WINDOW)	Definition / Possible source	Signal number (ALARM_WORD_1/2)		Remark
A 101	01 START INH	**Alarm: Start Inhibition** Check: - Parameter settings **[P 13.11]** and **[P 15.14]**.	**9.04**	**bit 0**	Self-resetting after ENABLE
A 102	02 EMER STOP	**Alarm: EMERGENCY STOP** Check: - Signal at binary input DI5; - Logic of a.m. signal (parameter **[P 13.12]**); if necessary, invert the signal.	**9.04**	**bit 1**	Self-resetting after ENABLE
A 103	03 MOT1 TEMP	**Alarm: Overtemperature MOTOR 1** Check: - Parameter setting **[P 28.10]** correct?	**9.04**	**bit 5**	
A 104	04 MOT1 LOAD	**Alarm: Overload MOTOR 1 (Thermal Model 1)** Check: - Overload of motor - Parameter setting **[P 28.03]** correct?	**9.04**	**bit 6**	
A 105	05 CONV TEMP	**Alarm: Overtemperature Power Section** This signal will already appear at approx. 10 °C below the shutdown temperature applying for Fault Signal **F 4** (see max. temperature **[P 04.17]**). Check: - See Fault Code **F 4**.	**9.04**	**bit 3**	
A 108	08 CON RAM BACKUP	**Alarm: Check Sum RAM not valid** Switch OFF and ON auxiliary supply.	**9.05**	**bit 12**	

Code seven segm. display	Text on LCD of control panel CDP 312 (or DRIVES WINDOW)	Definition / Possible source	Signal number (ALARM_WORD_1/2)		Remark
A 115	15 CURR RIPP	**Armature current ripple** One or several thyristors carry no current. Check: - Current feedback with oscilloscope (6 pulses within one cycle visible?); - Branch fuses, thyristor gate connection and gate-cathode resistance; - See also parameters **[P 43.10]**, **[P 43.11]**, and **[P 43.12]**	**9.05**	**bit 0**	
A 118	18 MAIN UVLT	**Alarm: Mains Undervoltage (AC)** Setting of undervoltage monitoring with Parameter **[P 40.01]** or/and **[P 40.02]** Check: - See also Fault Code **F 29**.	**9.04**	**bit 10**	
A 120	20 CURR DEV	**Alarm: Armature Current Deviation** If the current reference ARM_CUR_REF **[P 3.12]** deviates from the current feedback for more than 5 sec by more than 20 %, referenced to the rated current, this signal will be shown. Check: - Ratio between mains supply voltage and EMF	**9.04**	**bit 13**	
A 123	23 MOT2 TEMP	**Alarm: Overtemperature MOTOR 2** Check: - Parameter setting **[P 28.13]** correct? See also Fault Code **F 6.**	**9.04**	**bit 8**	
A 124	24 MOT2 LOAD	**Alarm: Overload MOTOR 2 (Thermal Model 2)** Check: - Overload of motor - Parameter setting **[P 28.07]** correct?	**9.04**	**bit 9**	
A 125	25 NO ACK	**Alarm: No Acknowledge DC Break or Dynamic Brake contactor** Check: - Digital inputs **[P 15.18], [P 15.20]**	**9.04**	**bit 2**	RUN = blocked
A 126	26 CONV FAN	**Alarm: No (Thyristor Power) Converter FAN Acknowledge** Check: - See Fault Code **F 50.**	**9.04**	**bit 12**	

Code seven segm. display	Text on LCD of control panel CDP 312 (or DRIVES WINDOW)	Definition / Possible source	Signal number (ALARM_WORD_1/2)		Remark
A 127	27 EXT FAN	**Alarm: No Acknowledge from External FAN (of Motor)** Check: - Contactor circuit/supply for fan of motor; - Status of binary inputs/outputs (DI2/DO1) on SDCS-IOB-2/ SDCS-CON-2 boards; - Parameter setting **[P 15.07]**.	**9.04**	**bit 15**	
A 129	29 TYPE CODE	**Alarm: Type Code (Hardware Code of Thyristor Power Converter) changed** Unit type code stored in memory differs from the hardware coding. Check: - New control board SDCS-CON-2 installed? - Control board SDCS-CON-2 / SDCS-PIN-xx board interchanged? Action: - Save values in non-volatile memory using parameter DRIVE-MODE **[P 15.02] = 22.**	**9.05**	**bit 1**	
A 132	32 AUX UVOLT	**Auxiliary voltage alarm** The auxiliary voltage (230 V) is too low while the drive is not in operation. For more details see Fault Code **F 1.**	**9.05**	**bit 2**	
A 133	33 OVERVOLT	**Overvoltage protection active** Converter blocked (via DI2 in field exciter mode)	**9.05**	**bit 3**	

Alarm Signals referring to the SDCS-AMC-DC board

Code seven segm. display	Text on LCD of control panel CDP 312 (or DRIVES WINDOW)	Definition / Possible source	Signal number (ALARM_WORD_1/2)		Remark
— **)	CH0 COMMUN	**Alarm: Communication fault with fieldbus, APC** or **fieldbus adapters** If this signal has to be effective also as a fault signal, the mode of functioning can be changed by setting the parameter **CH0_COM_LOSS_CTRL [P 70.05]**. Check: - Optical fibre cable connections; - APC, PLC and adapters ready for operation?	**9.05**	**bit 11**	

Code seven segm. display	Text on LCD of control panel CDP 312 (or DRIVES WINDOW)	Definition / Possible source	Signal number (ALARM_WORD_1/2)		Remark
— **)	M/F LINK	**Alarm: Communication fault in the Master-Follower-link** If this signal has to be effective also as a fault signal, the mode of functioning can be changed by setting the parameter **CH2_COM_LOSS_CTRL [P 70.14]**. Check: - Optical fibre cable connections.	**9.04**	**bit 11**	
— **)	PANEL LOSS	**Alarm: Connection fault to the Control Panel CDP 312 / DRIVES WINDOW** Check: - Control Panel CDP 312 disconnected? - Connection adapter or cable damaged?	**9.05**	**bit 13**	
— **)	EXT ALARM	**External alarm at binary input (DI) selected by Parameter [P 15.24]** An external alarm is activated by a ”Low signal” at the binary input (DI) selected by Parameter **[P 15.24].**	**9.05**	**bit 9**	
— **)	SPEED SCALE	**Alarm: Speed scaling out of range** see parameter **[P 50.01].**	**9.05**	**bit 7**	

**) No Alarm Code available on seven segment display!

ABB Automation Products GmbH
Postfach 1180
D-68619 Lampertheim
Tel: +49 (0) 62 06-5 03-0
Fax:+49 (0) 62 06-5 03-6 09
www.abb.com/motors&drives

Ident. No.: 3ADW 000 080 R0501 Rev E
12_00

080R0501A0490000