OTZW 26

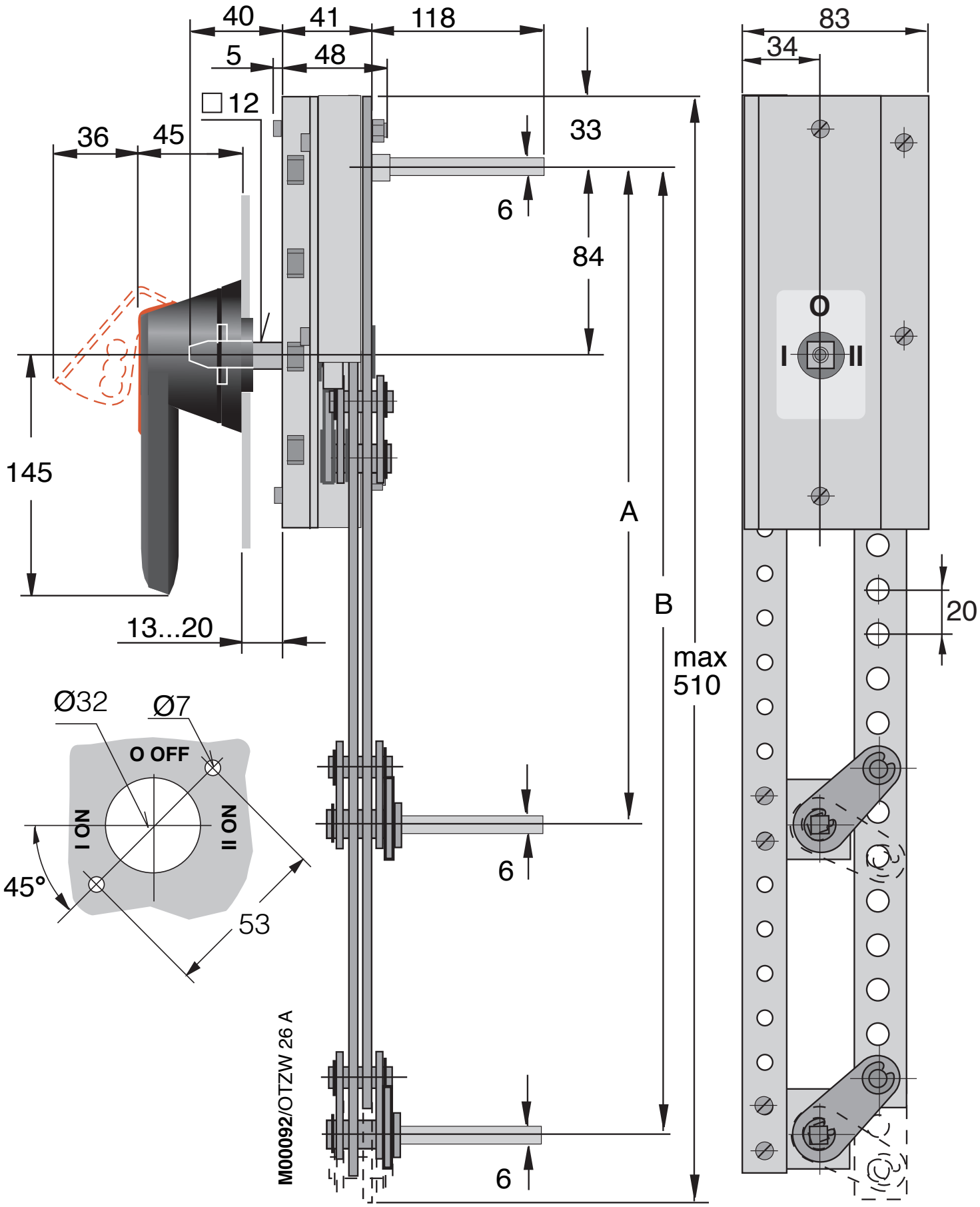

	A	B
OTZW 26	210+(0...9)x20 mm	210+(0...9)x20 mm

Piirustus No. Document No.	13*OTZW 26 A 2279 4540		
Teki Prepared	05-08-22 M Horsma-aho	Tarkasti Checked	Hyväksyi Approved
ABB Oy		Low Voltage Products	