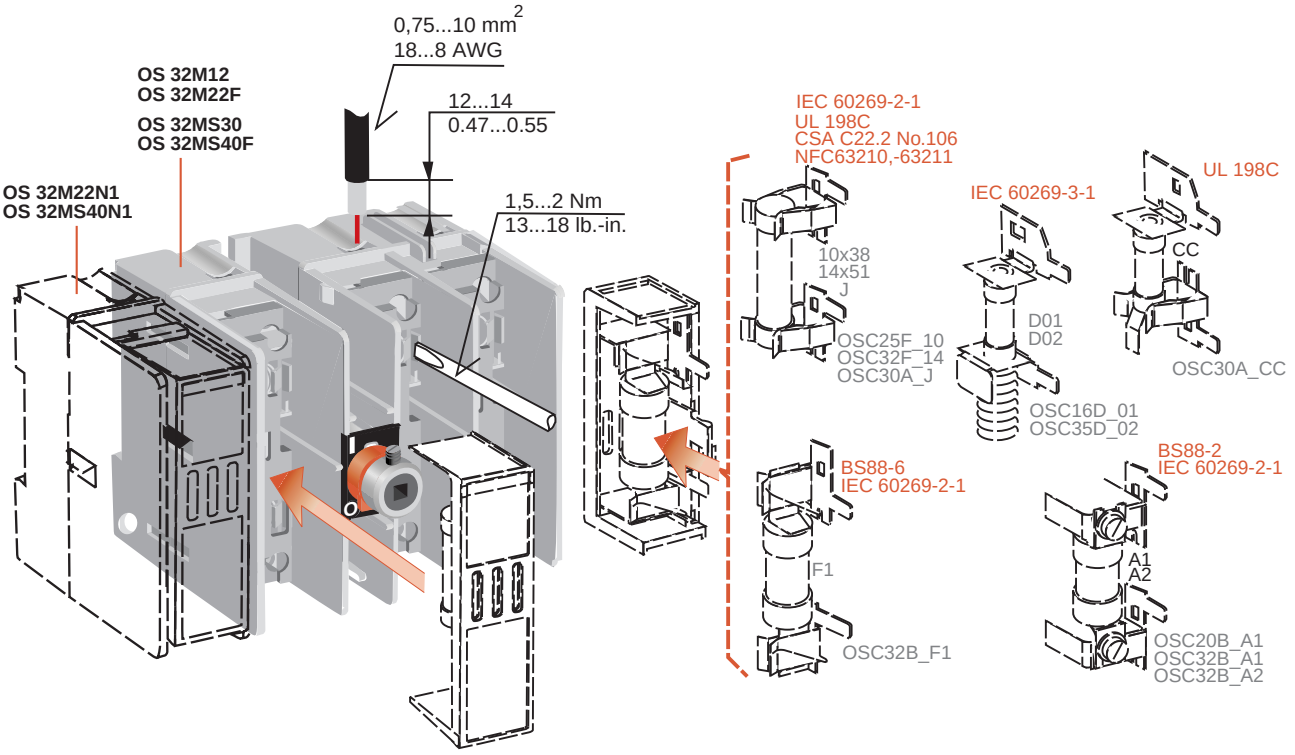

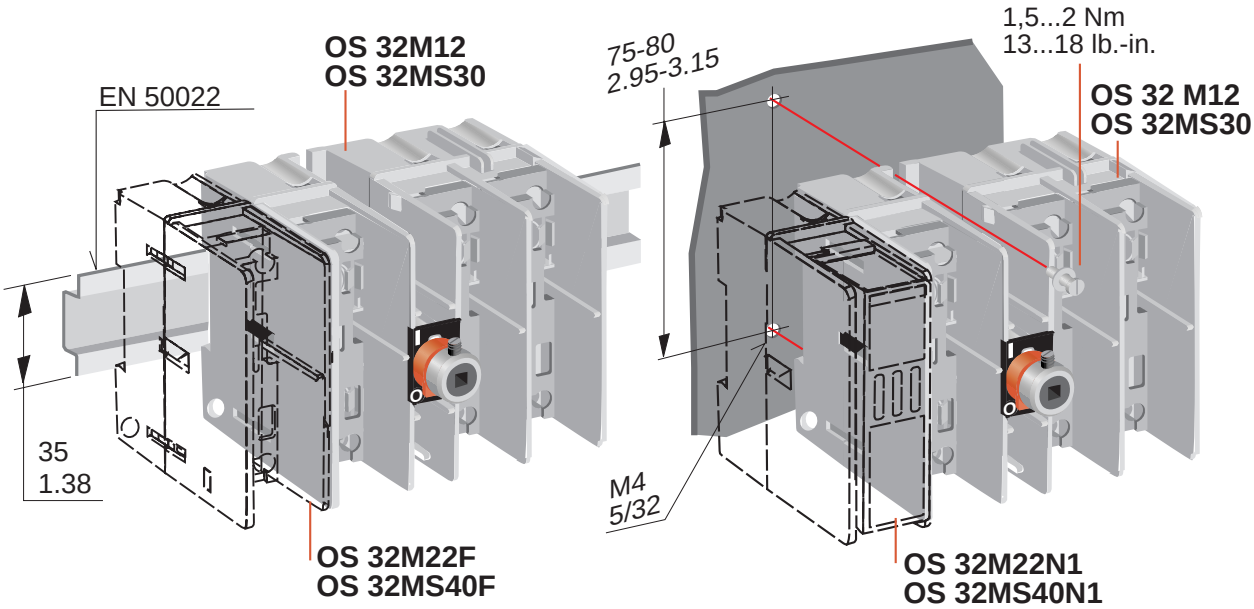

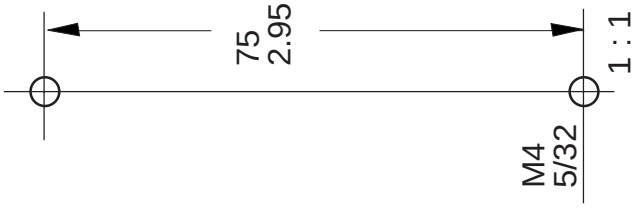

ABB Oy
Low Voltage Products
P.O. Box 622
FIN-65101 Vaasa, Finland
Telephone +358-10 22 4000
Telefax +358-10 22 45708