BEA 210/S4

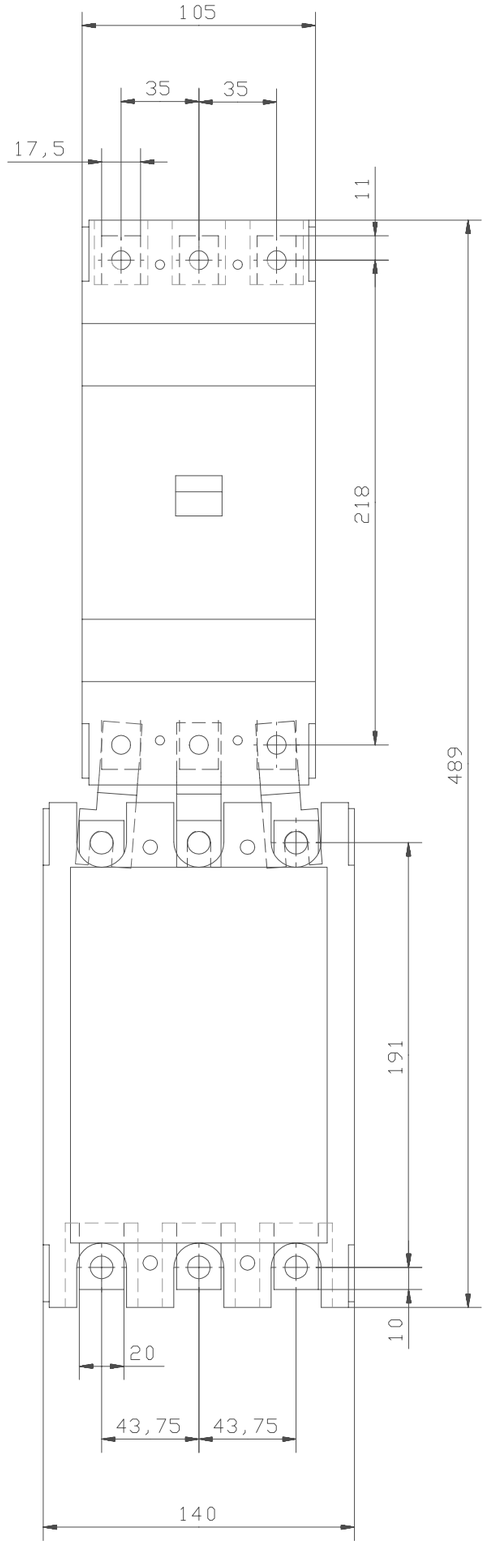

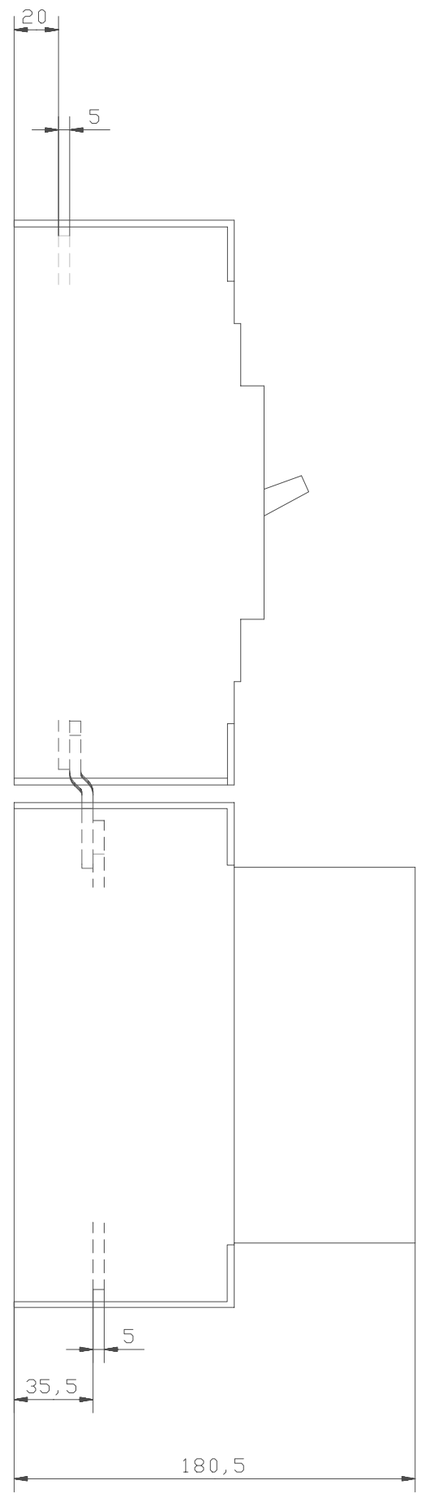

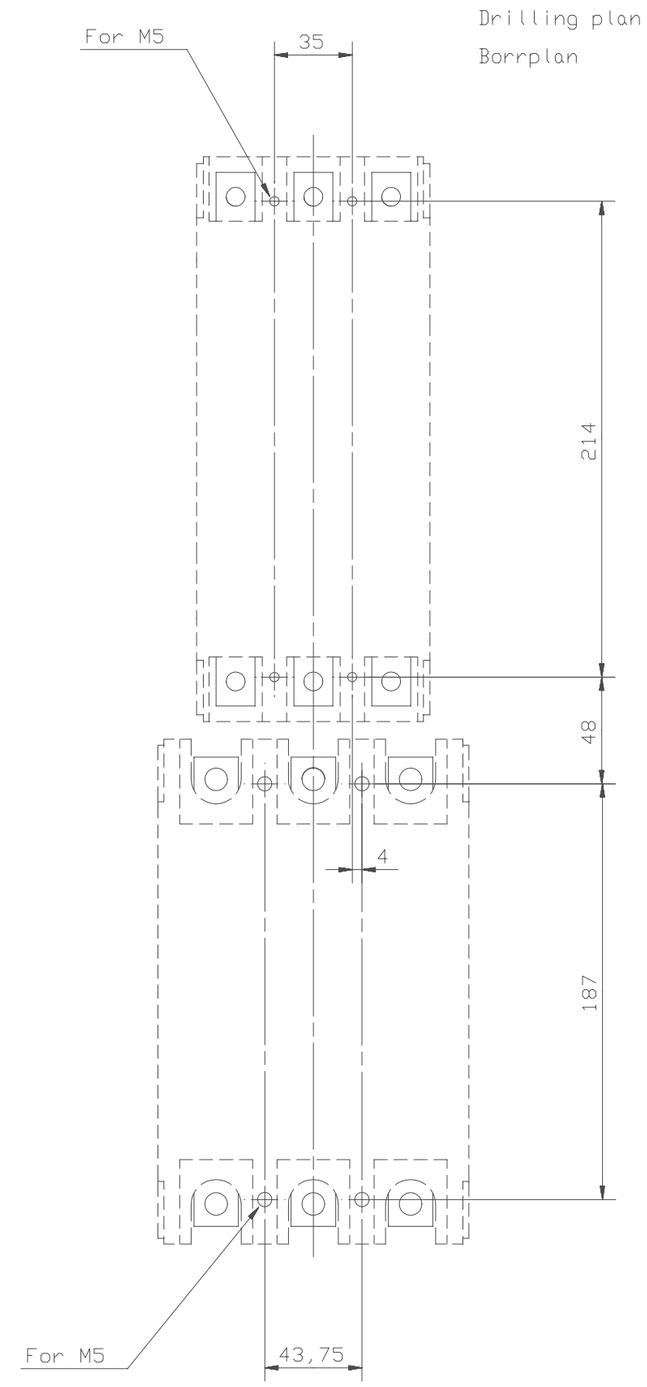

Connection bars between contactor and MCCB
A210/S4

Prepared G Engblom	Responsible department SECRL/AU	Title DIMENSION PRINT	
Approved K Herold	Take over department	MÅTTSKISS	Lang. 82
Revision	Scale 1:2	Document No. 5354 0919-34	Cont. -
ABB Control		ISSUED 99-08-27	Sheet 1

Rev ind	Revision	Appd	Year	Week

We reserve all rights in this document and in the information contained therein. Reproduction, use or disclosure to third parties without express authority is strictly forbidden. © ABB Control