2238 5631/ 1SCC340001M0008

34 OTP 16H3 H

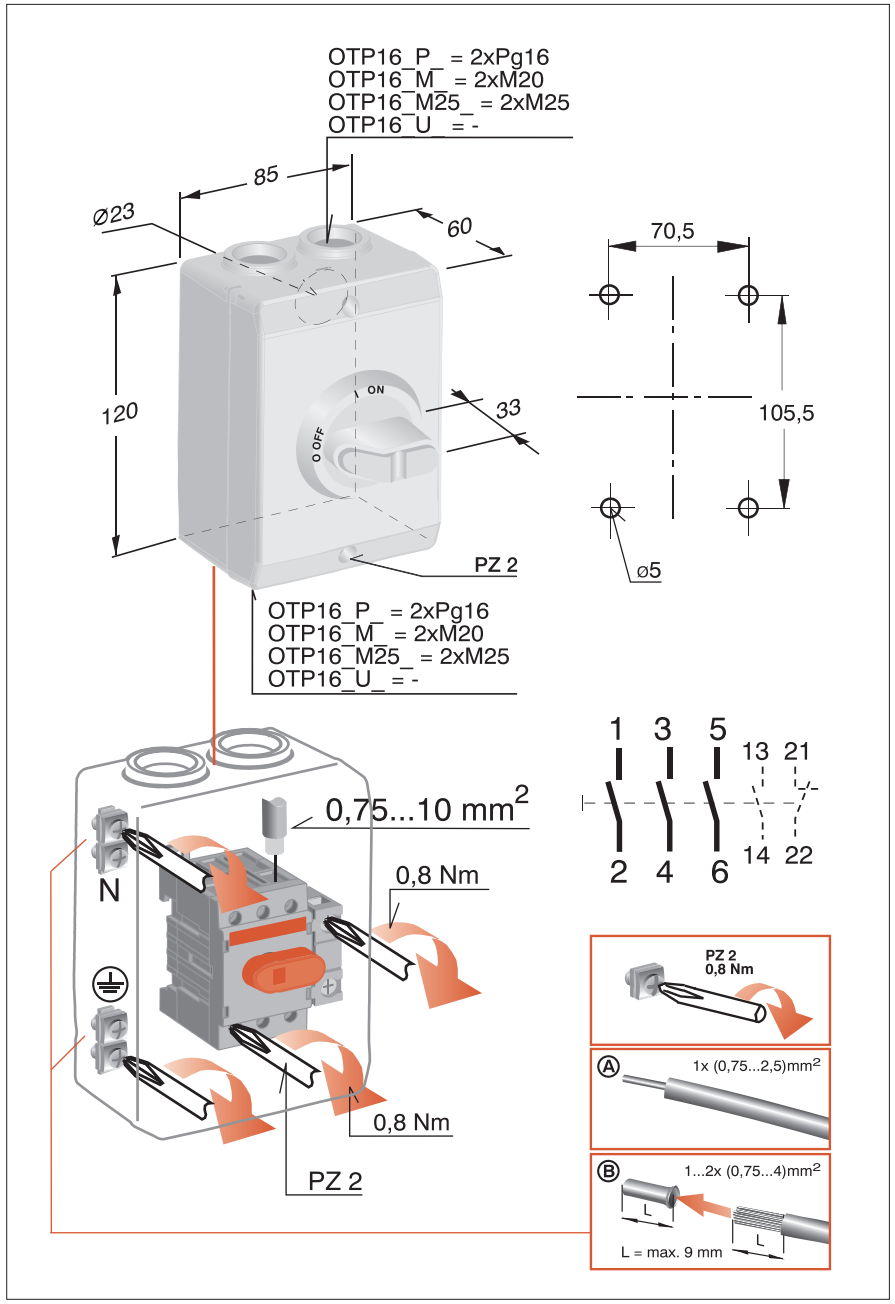

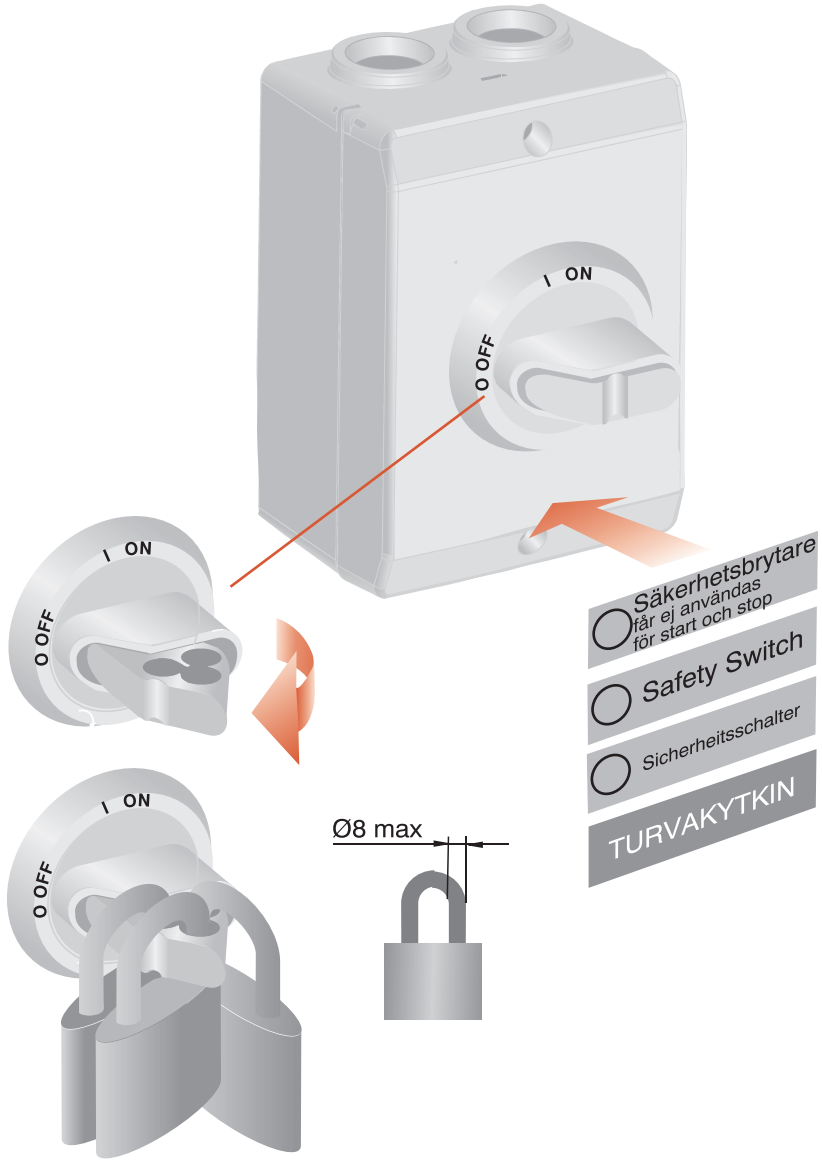

ABB Oy
Low Voltage Products
P.O. Box 622
FIN-65101 Vaasa, Finland

Telephone +358-10 224 000
Telefax +358-10 224 5708

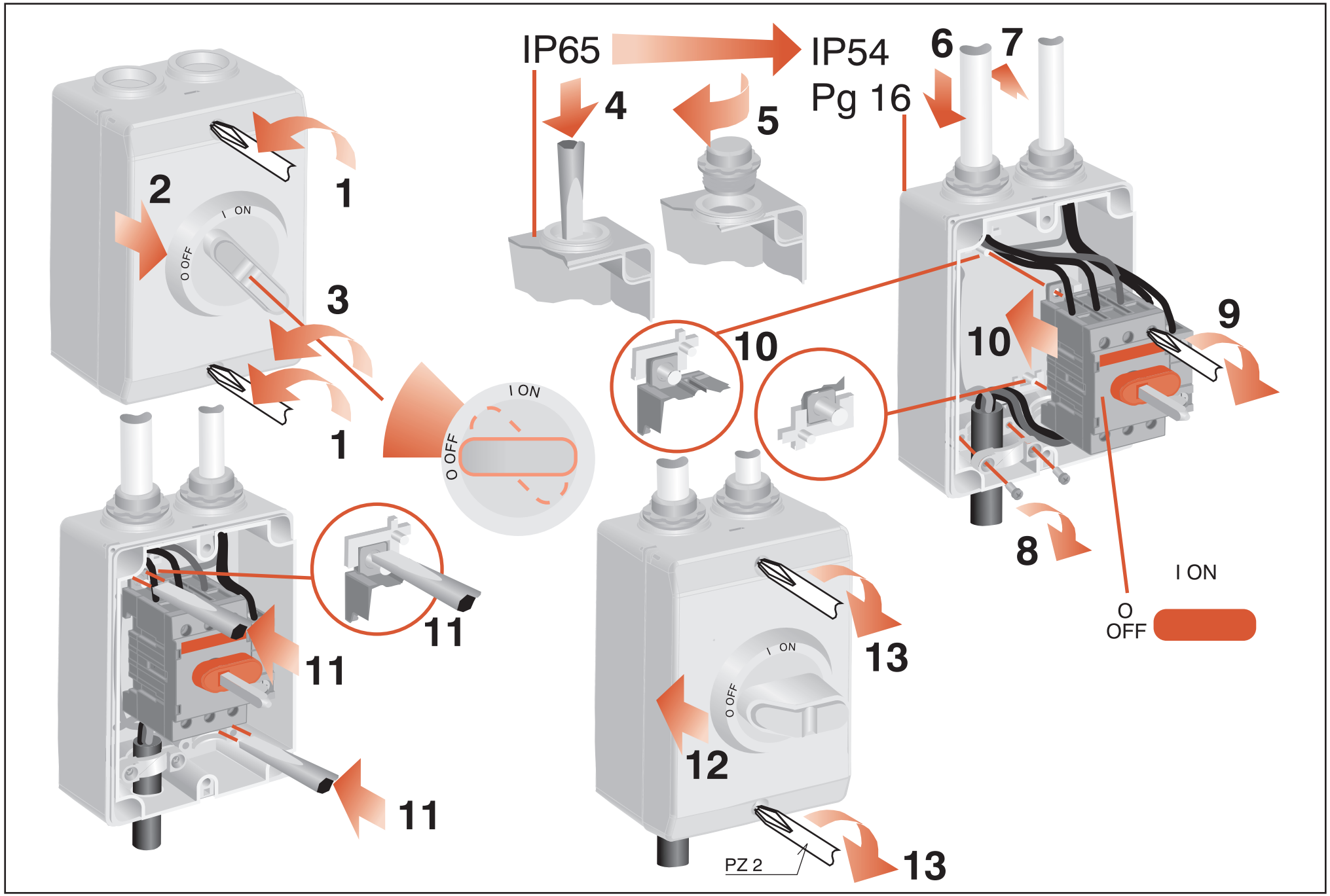
IP65
IP54
Pg 16
1
2
3
4
5
6
7
8
9
10
11
12
13
I ON
O OFF
PZ 2