VL2250 0228

34 OTZW 23- 24 B

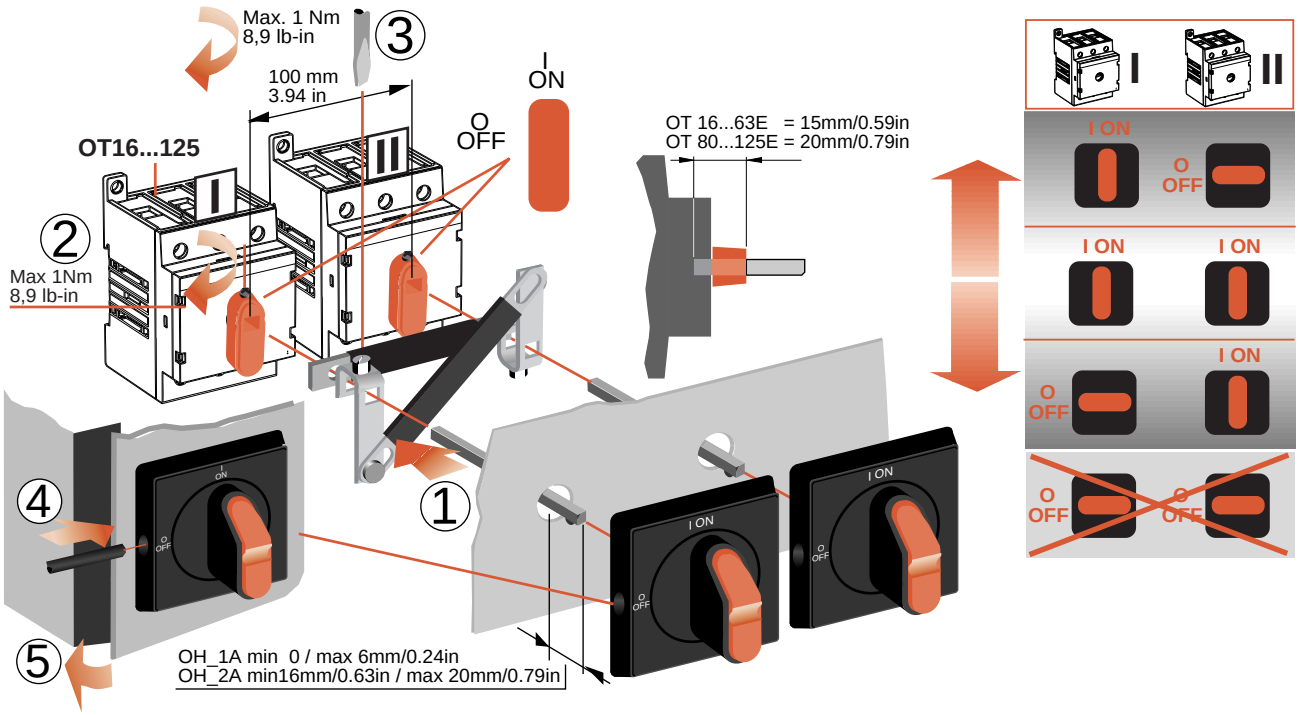

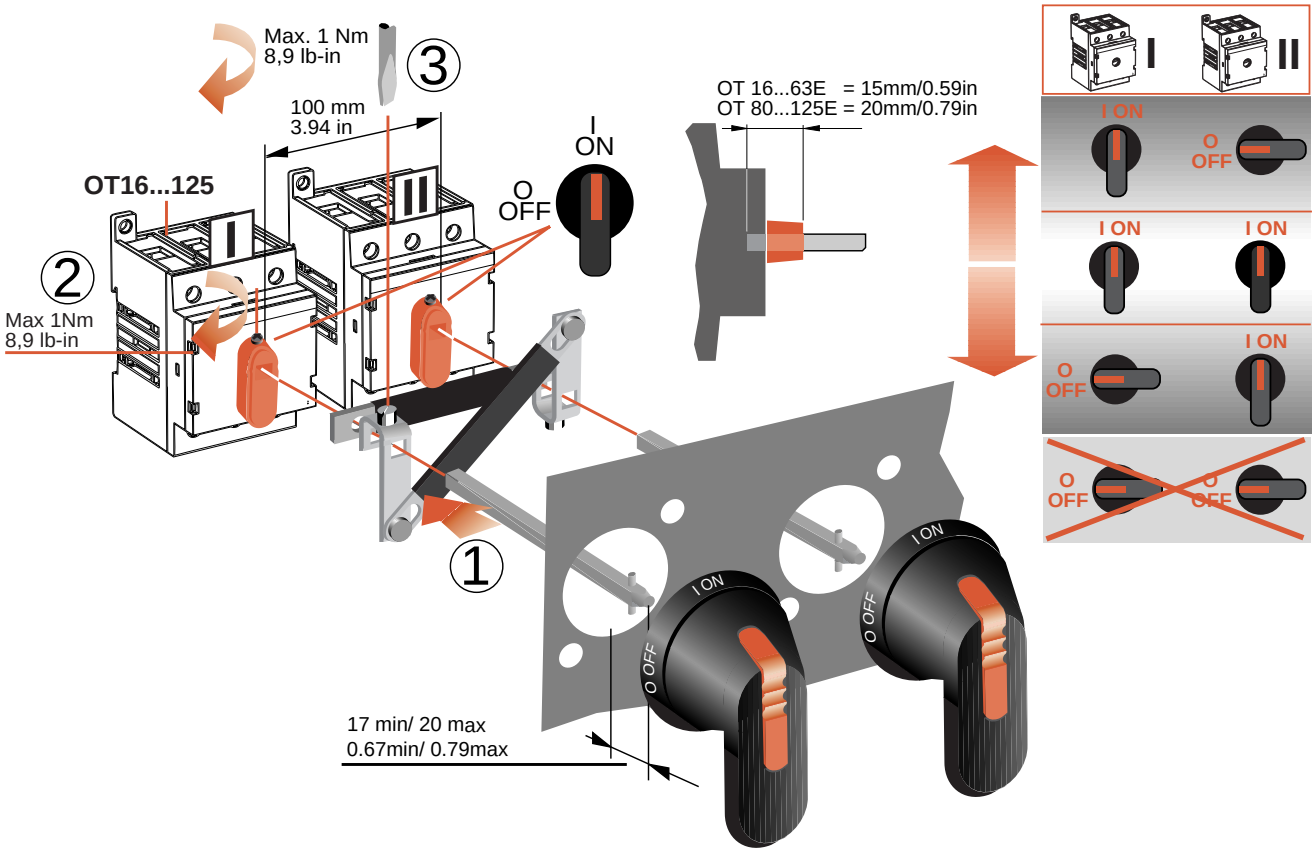

ABB Control Oy
Low Voltage Apparatus
P.O. Box 622
FIN-65101 Vaasa, Finland
Telephone +358-10 22 4000
Telefax +358-10 22 45708

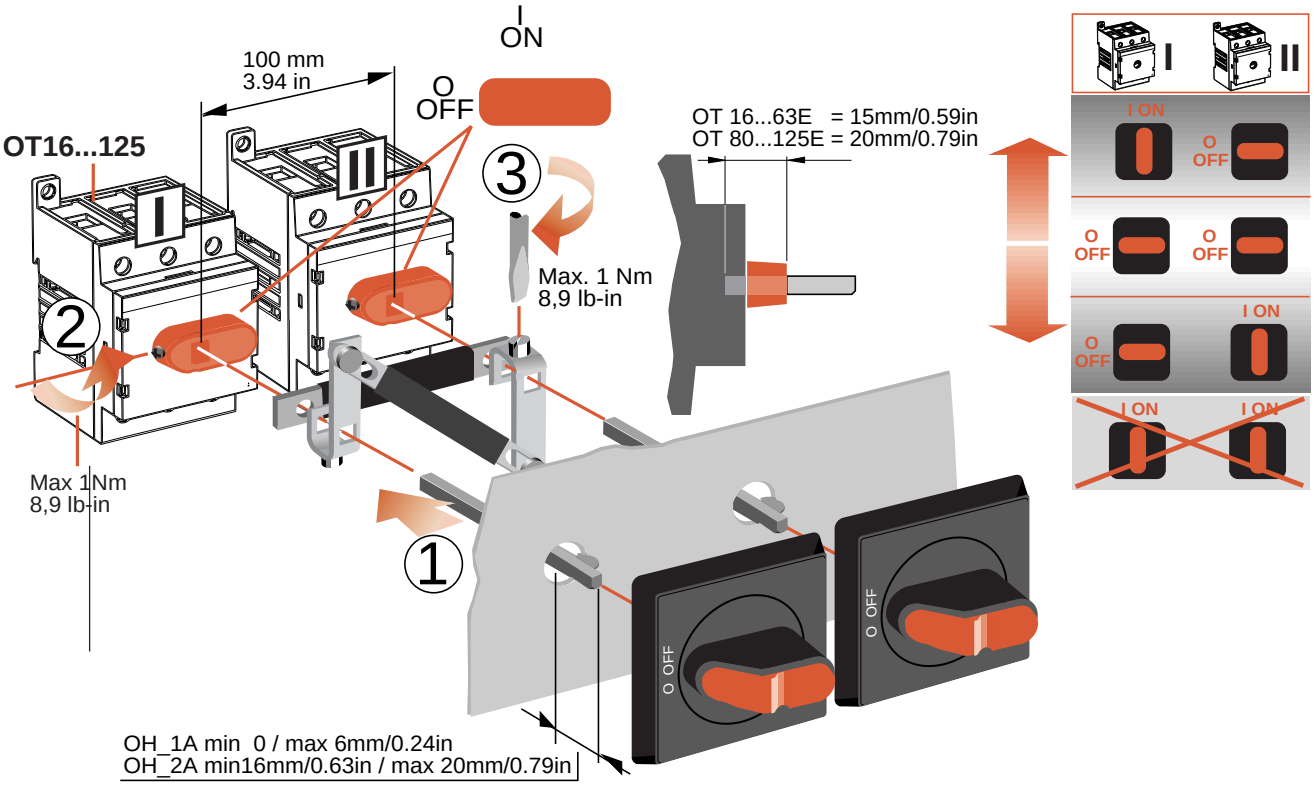
I
ON
100 mm
3.94 in
O
OFF
OT16...125
OT 16...63E = 15mm/0.59in
OT 80...125E = 20mm/0.79in
3
Max. 1 Nm
8,9 lb-in
2
Max 1Nm
8,9 lb-in
1
O OFF
O OFF
OH_1A min 0 / max 6mm/0.24in
OH_2A min16mm/0.63in / max 20mm/0.79in
I
II
I ON
O
OFF
O
OFF
O
OFF
I ON
O
OFF
I ON
I ON

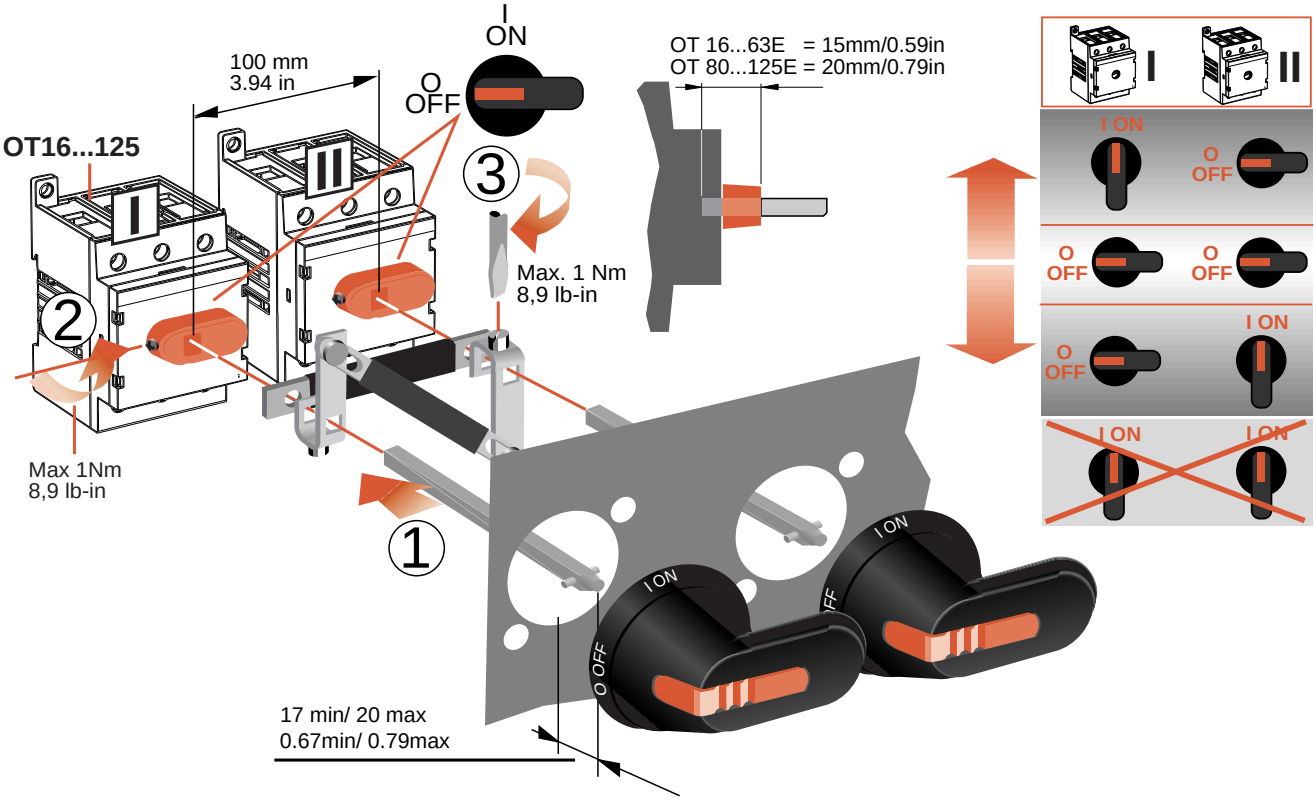
I
ON
100 mm
3.94 in
O
OFF
OT16...125
OT 16...63E = 15mm/0.59in
OT 80...125E = 20mm/0.79in
3
Max. 1 Nm
8,9 lb-in
2
Max 1Nm
8,9 lb-in
1
I ON
O OFF
17 min/ 20 max
0.67min/ 0.79max
I
II
I ON
O
OFF
O
OFF
O
OFF
I ON
O
OFF
I ON
I ON