VL 2248 1771

34 OTZW 8 A

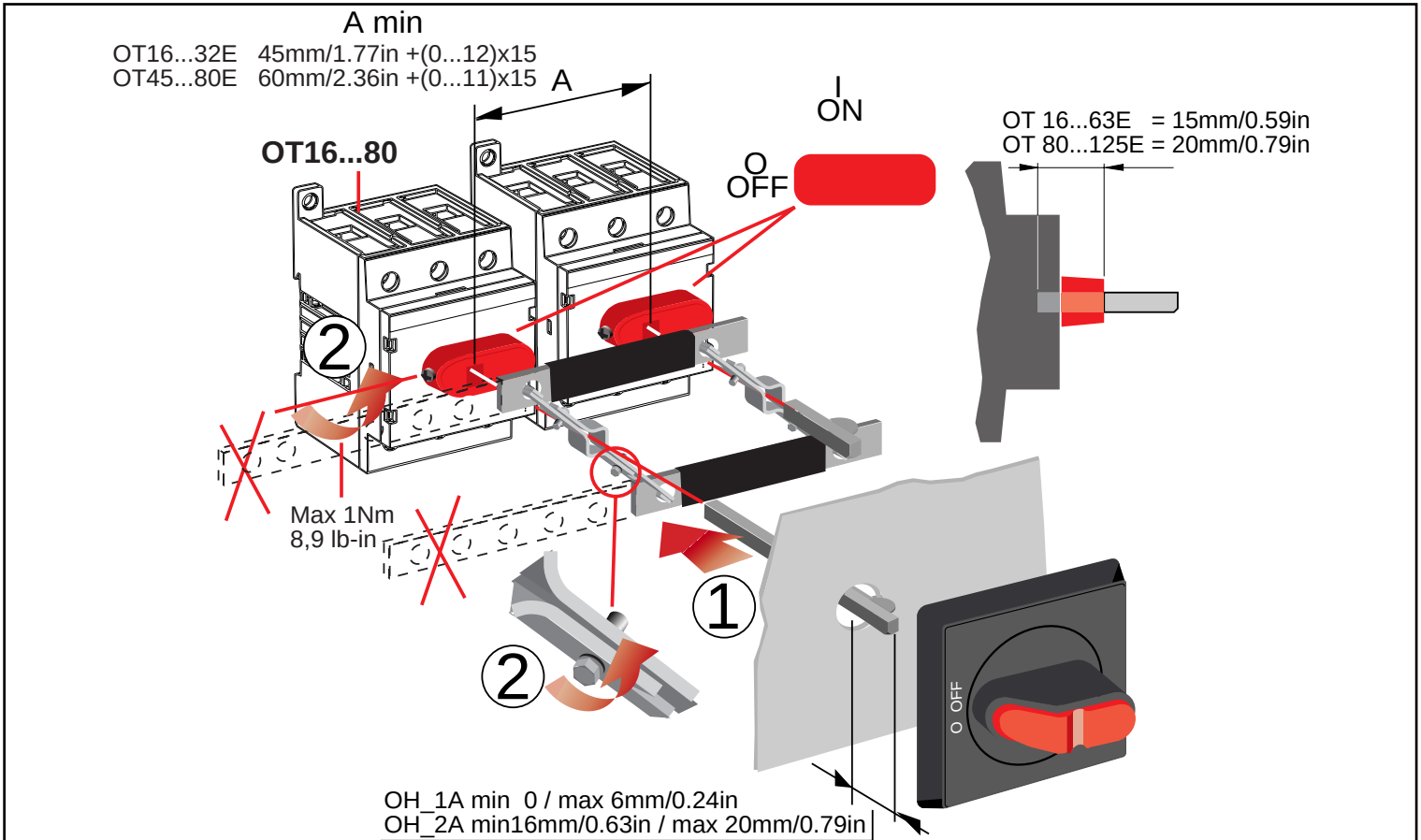

ABB Control Oy

Low Voltage Apparatus
P.O. Box 622
FIN-65101 Vaasa, Finland

Telephone +358 10 224 000
Telefax +358 10 224 5708

OTZW 8

VL 2248 1771

34 OTZW 8 A

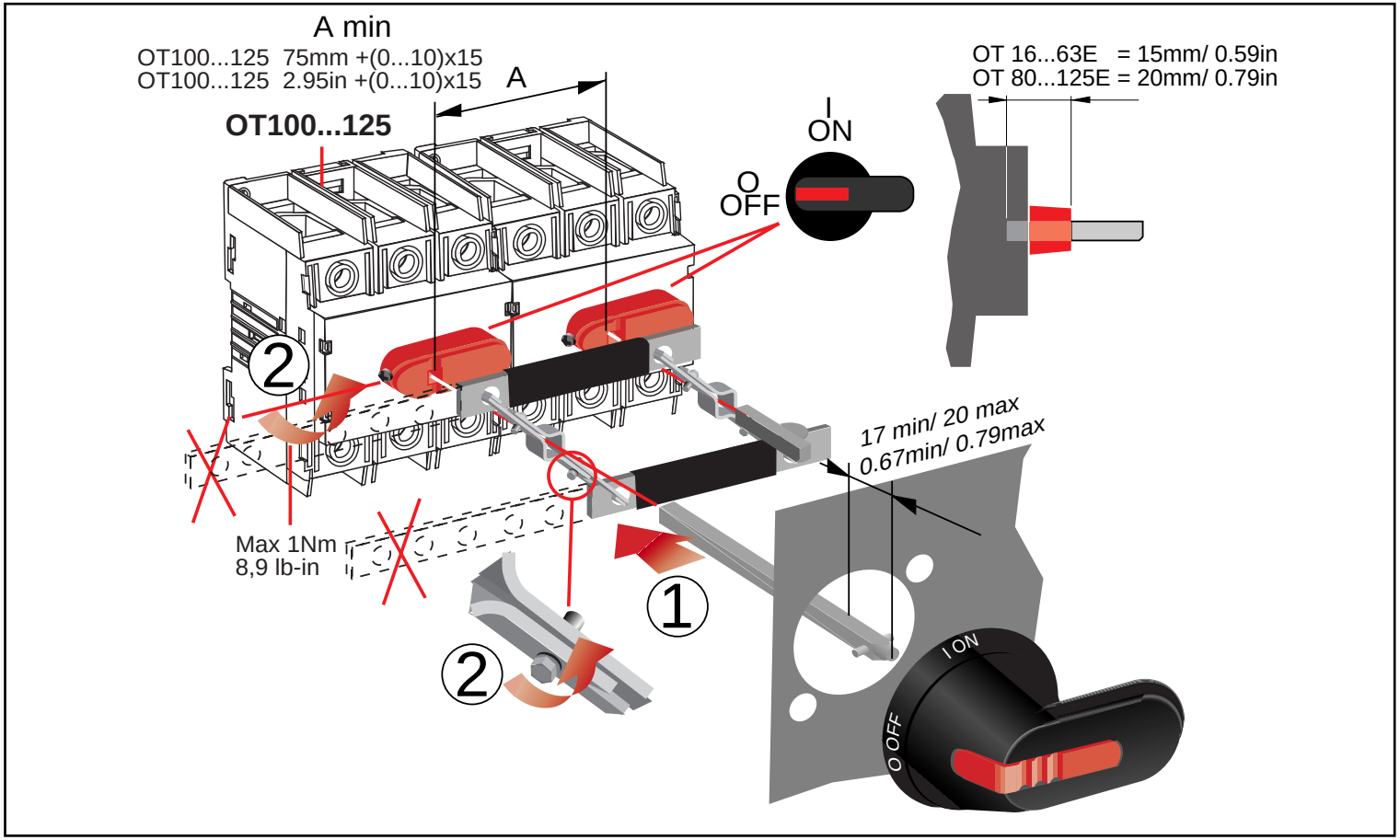

ABB Control Oy

Low Voltage Apparatus
P.O. Box 622
FIN-65101 Vaasa, Finland

Telephone +358 10 224 000
Telefax +358 10 224 5708