Operating Instructions
PROFIBUS PA

Conductivity Transmitters
Model TB82TC / ML82TC Toroidal

ABB Incorporated

The Company

ABB Incorporated is an established world force in the design and manufacture of instrumentation for industrial process control, flow measurement, gas and liquid analysis and environmental applications.

As a part of ABB, a leader in process automation technology, we offer customers application expertise, service and support worldwide.

We are committed to teamwork, high quality manufacturing, advanced technology and unrivalled service and support.

The quality, accuracy and performance of the Company's products result from over 100 years experience, combined with a continuous program of innovative design and development to incorporate the latest technology.

ISO 9001:2000

Reno, Nevada USA Facility
Cert. No. CERT-9170-2003-AQ-HOU-RAB

Use of Instructions

Warning.
An instruction that draws attention to the risk of injury or death.

Caution.
An instruction that draws attention to the risk of damage to the product, process or surroundings.

Note.
Clarification of an instruction or additional information.

Information.
Further reference for more detailed information or technical details.

Although **Warning** hazards are related to personal injury, and **Caution** hazards are associated with equipment or property damage, it must be understood that operation of damaged equipment could, under certain operational conditions, result in degraded process system performance leading to personal injury or death. Therefore, comply fully with all **Warning** and **Caution** notices.

Information in this manual is intended only to assist our customers in the efficient operation of our equipment. Use of this manual for any other purpose is specifically prohibited and its contents are not to be reproduced in full or part without prior approval of Technical Communications Department, ABB Automation.

Health and Safety

To ensure that our products are safe and without risk to health, the following points must be noted:

1. The relevant sections of these instructions must be read carefully before proceeding.
2. Warning labels on containers and packages must be observed.
3. Installation, operation, maintenance and servicing must only be carried out by suitably trained personnel and in accordance with the information given.
4. Normal safety precautions must be taken to avoid the possibility of an accident occurring when operating in conditions of high pressure and/or temperature.
5. Chemicals must be stored away from heat, protected from temperature extremes and powders kept dry. Normal safe handling procedures must be used.
6. When disposing of chemicals ensure that no two chemicals are mixed.

Safety advice concerning the use of the equipment described in this manual or any relevant hazard data sheets (where applicable) may be obtained from the Company address on the back cover, together with servicing and spares information.

CONTENTS

Section	Page
CONTENTS	3
INTRODUCTION	3
SUPPLEMENTARY DOCUMENTATION	3
TRANSPORT	4
STORAGE	4
HANDLING	4
PRODUCT IDENTIFICATION	4
PRINCIPLE OF OPERATION	5
INSTALLATION	7
ELECTRICAL CONNECTIONS	8
LOCAL HMI OPERATING PROCEDURES	9
MEASURE MODE	10
CALIBRATE MODE	11
Process Variable Calibrate State	11
Temperature Calibrate State	12
Edit Calibrate State	12
Reset Calibrate State	13
OUTPUT/HOLD MODE	13
CONFIGURE MODE	14
Analyzer State	15
Temperature Sensor State	17
Temperature Compensation State	17
Diagnostic State	19
SECURITY MODE	19
SECONDARY DISPLAY MODE	20
UTILITY MODE	21
Reset Configuration State	21
Reset Security State	21
Reset All State	21
Reset Software State	21
Profibus PA Address (PA. ADR) State	21
Serial Number (SER.NUM) State	22
Device Identification Select (ID. SEL) State	22
Damping State	22
TRANSMITTER'S FIELDBUS FUNCTIONALITY	22
Electronic Device Data (GSD Files)	22
Identification Number	23
Electronic Device Description (EDD)	23
Device Type Manager (DTM)	23
DEVICE BLOCKS	23
Cyclical Configuration Data	38
HARDWARE DIP SWITCH FUNCTIONS	40
SIMPLE FAULT FINDING	41
DIAGNOSTIC INFORMATION	42
Calibration Diagnostic Messages	43
Additional Diagnostic Messages	43
SENSOR TROUBLESHOOTING	43
Visual Sensor Inspection	43
Sensor Electronic Test	44
Transmitter Electronic Test	45
DIAGNOSTIC INFORMATION RECEIVED FROM THE FIELDBUS	46
DISMANTLING AND REASSEMBLY	49
SPECIFICATIONS	50
GLOSSARY OF PROGRAMMING TEXT PROMPTS	52
PRODUCTS & CUSTOMER SUPPORT	55

INTRODUCTION

The **TB82TC Toroidal Conductivity PROFIBUS PA Transmitters** are a modular range of field mounted, microprocessor-based instruments. Accurate and reliable measurement of solution conductivity is provided, in the even most difficult and hazardous industrial environments.

The TB82 family of transmitters offers Analog (4-20 mA output), Analog with HART digital communication, PROFIBUS PA, and FOUNDATION Fieldbus product versions.

This manual describes the features, installation requirements, configuration commissioning, and calibration procedures related to the TB82TC Toroidal Conductivity PROFIBUS PA Transmitter.

Refer to the supplementary documentation section to obtain additional information on the PROFIBUS communication protocol and device installation.

SUPPLEMENTARY DOCUMENTATION

Reference information regarding Profibus design and structure can be found in the following documents:

- Document 30 Fb 10 Fieldbus Solutions from ABB - Technical brochure
- IEC 61158-2 Fieldbus standard for use in industrial control systems – Part 2: Physical Layer specification and service definition
- EN 50170-2 General Purpose Field Communication System
- DIN 19245 Measurement and Control Profibus

Visit the internet site for online/up-to-date information and device driver files: www.abb.com or www.profibus.com

TRANSPORT

After factory calibration, the instrument is packed in a carton, intended to provide protection from physical damage.

STORAGE

The instrument does not require any special treatment if stored as dispatched and within the specified ambient conditions level listed in the Specification section. The storage period does not have a limit.

HANDLING

The instrument does not require any special precautions during handling, though care should be observed.

PRODUCT IDENTIFICATION

The following data plates shown in Figure 1 identify the instrument.

The Nameplate (Reference A) provides information concerning the product identity code (i.e., nomenclature), product name, operating voltage range, output type, serial number, test personnel badge number, and dielectric strength verification stamp.

The Agency Approval label (Reference B) is included when the transmitter is purchased for compliance with hazardous area regulations (e.g., intrinsic safety protection) for a specific country (e.g., CSA, FM, or ATEX).

EC conformance is identified using a CE label (Reference C). Optional tagging specified by customer requirements is provided via a supplementary tag (Reference D).

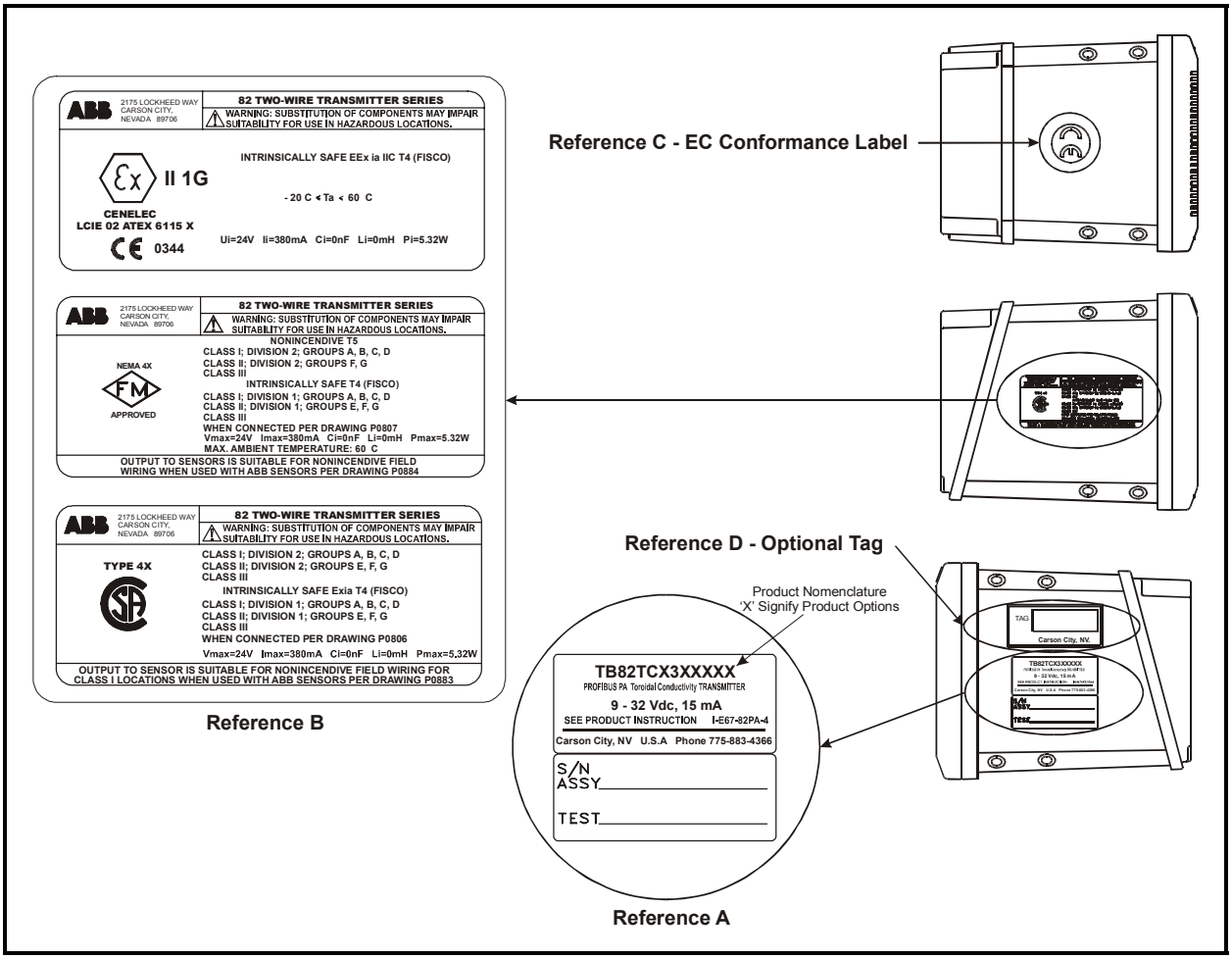

Figure 1 – Product Identification

PRINCIPLE OF OPERATION

The TB82TC Toroidal Conductivity PROFIBUS PA Transmitter provides on-line measurement of liquid properties in industrial environments using an advanced microprocessor-based technology. Fieldbus wiring provides transmitter power and digital communication based on the PROFIBUS PA protocol. The TB82TC transmitter can be installed indoors or outside due to its IP65 and NEMA 4X environmental enclosure ratings. Cable glands for field wiring ensure adequate sealing barriers to ambient conditions while maintaining the environmental ratings of the transmitter.

The Human Machine Interface (HMI), shown in Figure 2, consists of a tactile keypad having four universal keys, one hidden key, and a custom LCD. The LCD has a three and one-half digit numeric region that displays the process variable, a six-digit alphanumeric region that displays secondary information and programming prompts, and several status-indicating and programming icons. Each of the four universal keys is located under a set of icons. In each of the instrument modes and states, one icon over a given key will be illuminated and will represent that key's function. These assignments vary and depend upon the programming mode or state the transmitter is currently occupying. In addition to the key assignments, text strings located in the six character alphanumeric field are used as programming prompts.

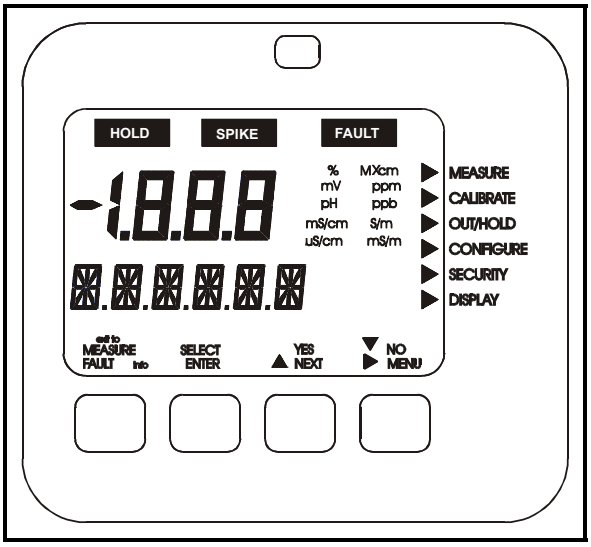

Figure 2 – TB82 HMI

The signal conditioning circuitry contained in the transmitter is designed to drive and receive signals from ABB's toroidal conductivity sensors. This circuit processes the sensor signal into a format that is transferred to a secondary circuit. The secondary circuit uses a microprocessor to compute the precise primary variable compensating for the combined effects of circuit tolerances, sensor calibration information, and temperature effects. Permanent memory stores transmitter and sensor specific information such as:

- Non-modifiable data such as the Manufacturer's Identifier, the Device Identifier, the hardware and software versions.
- Modifiable data such as transmitter configuration information, sensor calibration data, and security passwords.

The sensor and all electronic parts are galvanically isolated from the transmitter body. This isolation is verified at the factory using a Dielectric Strength Test.

The instrument consists of three functional circuits that have been divided into three unique Printed Circuit Board (PCB) assemblies:

- Signal Conditioning Input Assembly
- Microprocessor/Display Assembly
- Power Supply/Communication Assembly

A block diagram representing the electronic functional areas is shown in Figure 3. The flow of information starts from the sensor input and moves through the transmitter to the fieldbus interface that produces a digital signal compliant with IEC-61158-2 (see Supplementary Documentation). The digital communication and HMI capabilities provide for remote or local access to transmitter parameters for configuration and maintenance operations.

The fieldbus furnishes transmitter power and can be configured as a point-to-point, tree, Daisy Chain, or Trunk/Spurs network. Modulating the base quiescent current generates the communication signals. The quiescent current value is used as a reference in order to establish the number of devices that can be installed on a single bus line.

Data is transmitted over the bus using the digital, bit-synchronous Manchester II coding at a baud rate of 31.25 kbit/sec. Figure 4 shows an example of a typical bus configuration.

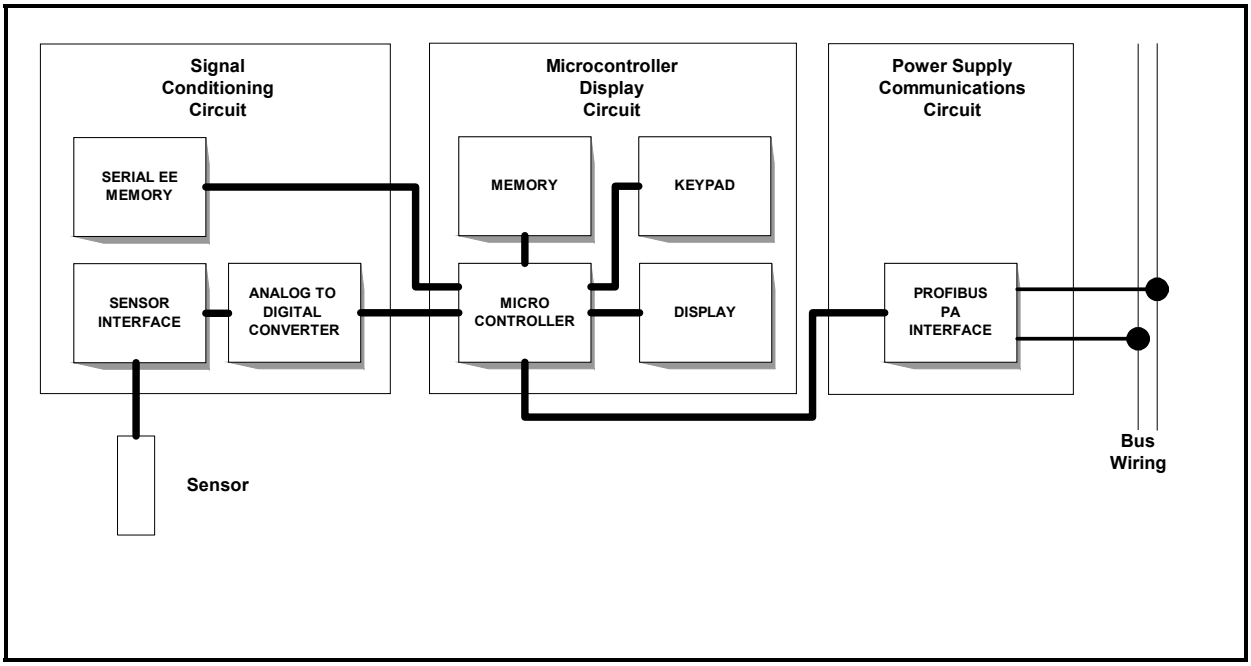

Figure 3 – Functional Block Diagram for FOUNDATION Fieldbus

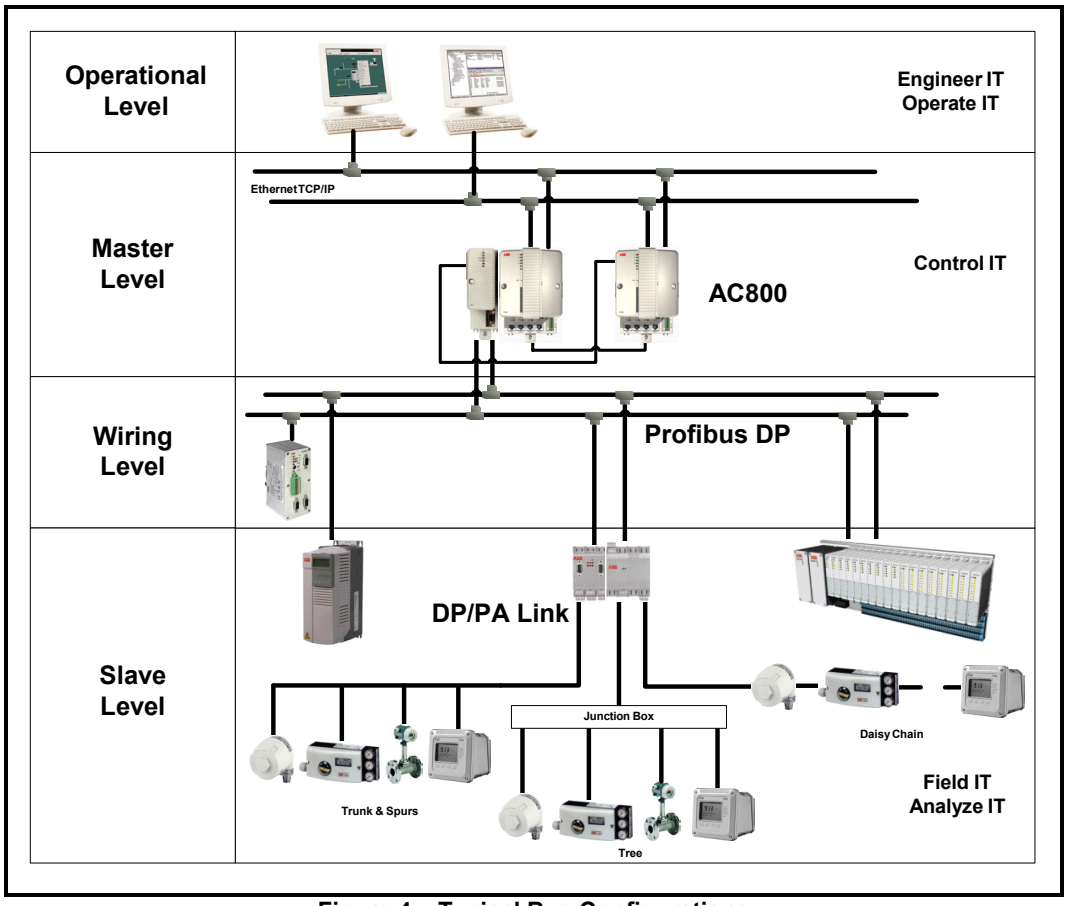

Figure 4 – Typical Bus Configurations

INSTALLATION

Besides the normal precautions for storage and handling of electronic equipment, the transmitter contains static sensitive devices. Since semiconductors can be damaged by the direct discharge of static electricity, avoid contact with terminal block conductors and electronic components on the circuit board.

When mounting the transmitter, choose a location that has ample clearance for the removal of the front bezel and rear cover. The location should provide easy access for maintenance procedures and not be in a highly corrosive environment. Excessive mechanical vibrations and shocks as well as relay and power switches should not be in the immediate area. Signal wiring should not be placed in conduit or open trays that contain power wiring for heavy electrical equipment. Field wiring should meet wiring practices appropriate for fieldbus devices (See Supplementary Documentation).

The transmitter can be pipe, hinge, wall or panel mounted. Use the appropriate figure below to assist in the mechanical installation of the transmitter.

Warning.
For installation in Hazardous Areas, i.e. areas with danger of fire and/or explosion, irrespective of the protection mode used, the installation must carried out in accordance with local authority regulations. Ensure also that the temperature of the transmitter does not exceed the value indicated in the Safety Marking plate.

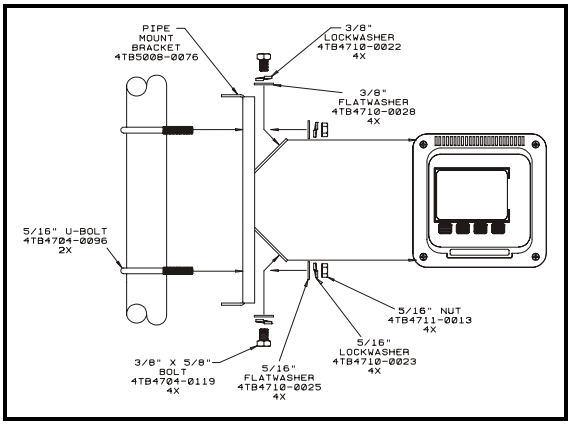

Figure 5 – Pipe Mounting Detail

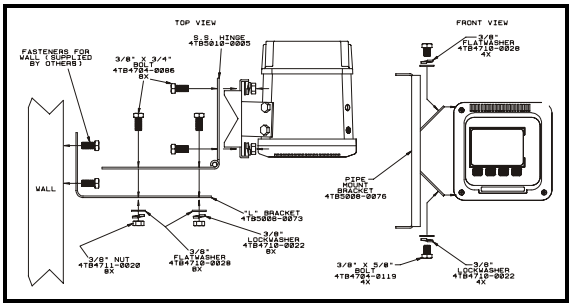

Figure 6 – Hinge Mounting Detail

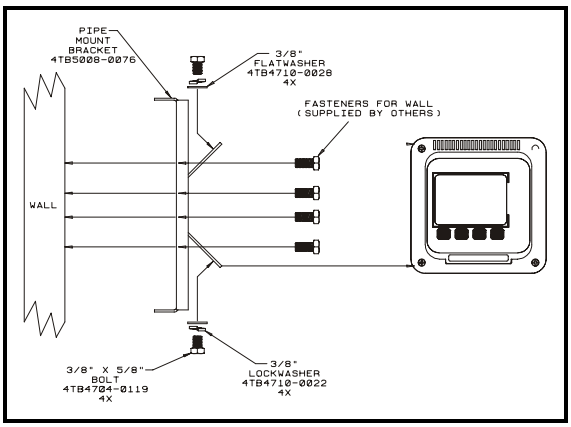

Figure 7 – Wall Mounting Detail

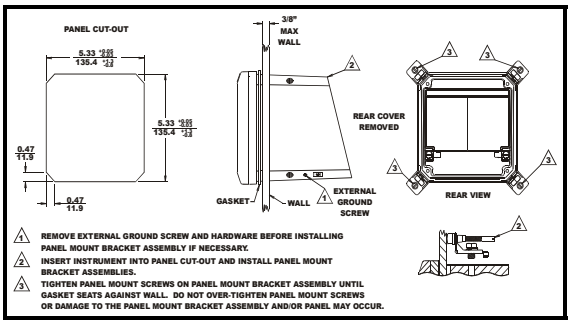

Figure 8 – Panel Mounting Detail

ELECTRICAL CONNECTIONS

Warning.
Use this equipment only in those classes of hazardous locations listed on the nameplate. Uses in other hazardous locations can lead to unsafe conditions that can injure personnel and damage equipment.

The bus powers the transmitter; thus, power and fieldbus signals share the same pair of wires. Separate conduit for power and sensor wiring is encouraged. Prior to entering the instrument housing, terminate rigid conduit and install a short length of flexible conduit to reduce stress to the housing. Signal wiring must not come in close proximity to high-power equipment or to cabling from such equipment. Wiring must be in accordance to the applicable local codes and fieldbus requirements (see Supplementary Documentation). Bus cabling must conform to IEC 61158-2.

The terminal blocks located in the rear of the transmitter accept wire sizes from 12 to 24 AWG. Pin-style terminals should be used for all connections. The terminal block label identifies all electrical connections and should be followed when wiring the transmitter. Observance to polarity for power connections is not required; however, polarity indications have been provided for consistence. Voltage requirements are listed in the Specifications and must be observed. Ensure the power supply that provides bus power is complaint with IEC 61158-2.

Normal grounding practice is to terminate all grounds in the control room side, in which case the field side of the screen should be adequately protected to avoid contact with metallic objects. For bus-powered systems, the grounding of the shield should be close to the power supply unit. For IS systems, the grounding should be at the safety barrier earth connection. The transmitter case should be grounded. Ground connections are internally (in the terminal compartment) and externally provided.

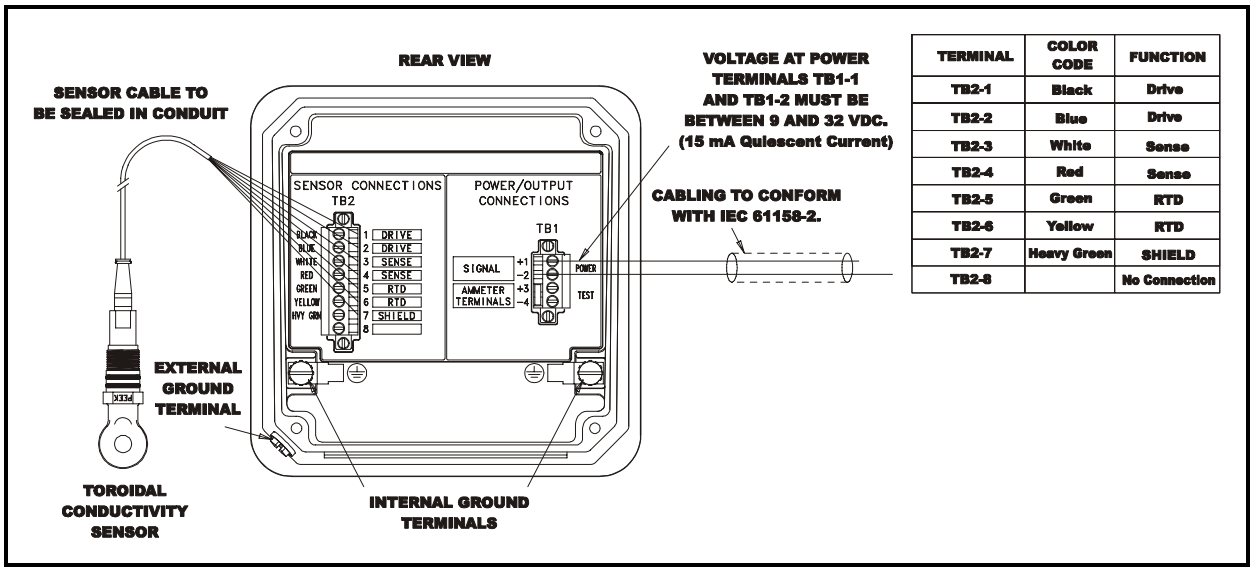

TERMINAL	COLOR CODE	FUNCTION
TB2-1	Black	Drive
TB2-2	Blue	Drive
TB2-3	White	Sense
TB2-4	Red	Sense
TB2-5	Green	RTD
TB2-6	Yellow	RTD
TB2-7	Heavy Green	SHIELD
TB2-8		No Connection

Figure 9 – Sensor and Power Wiring

. . . ELECTRICAL CONNECTIONS

To ensure fault-free communication, the bus must be properly terminated at both ends. Only approved bus terminators must be used for intrinsically safe circuits. The specific noise immunity and emitted interference are only guaranteed when bus screening is fully effective (e.g., ensuring that screening is maintained through any existing junction boxes.) Appropriate equi-potential bonding must be provided to avoid differences in potential among the individual plant components.

The address range for Profibus devices is 0 to 126. Per the Profibus specification, the default device address is set to 126. This address must be changed before two or more new field devices are placed on a Profibus segment. Usually lower addresses are reserved for master devices; thus, use an address that lies between 30 through 125. Marking the device with the set address is also recommended.

The number of transmitters or devices that can be connected to a bus is primarily dependent on the transmitters'/devices' power consumption, the type of cable, number of spurs, total cable length of the bus, and intrinsically safe requirements.

The table below lists some considerations that have been identified:

Parameters	Specification	
Data Rate	31.25 Kbits/s	
Type	Voltage	
Topology	Bus/tree	
Bus Power	DC	
Intrinsically Safe	No	Yes
Max No. of devices (1)	32	6
Max cable length (2)	1900 m	
Max spurs length (3)	120 m	

Notes:
1) The number of devices is dependent on several physical parameters (e.g., power consumption, bus cable, device IS parameters, etc.).
2) Length includes bus and all spurs lengths.
3) The maximum Spur length with one device is 120 m; 30 m less for each addition device.

For further information, see Supplementary Documentation list at the beginning of this manual.

LOCAL HMI OPERATING PROCEDURES

The TB82TC Toroidal Conductivity PROFIBUS PA Transmitter has seven main operating modes: Measure, Calibrate, Output/Hold, Configure, Security, Secondary Display and Utility. Within each mode, several programming states containing functions specific to the related mode are available.

Using a patented HMI, programming or accessing information from the transmitter's front panel is quick and easy. The LCD contains nine regions that provide the user with information on the process variable, engineering units, mode of operation, fault indication, secondary variable, and function key assignment (see Figure 2). The primary process variable is displayed in the three and one-half digit region. The Engineering Unit region supports this region. These display regions are active in all modes of operation; however, some programming states also use these regions for data entry.

The secondary variable is displayed in the six-character region. This display region is used for displaying secondary and fault information in the Measure Mode of operation and textual prompting in all other modes of operation.

Due to the limited number of characters supported by the secondary display, many of the prompts take the form of a text abbreviation (see Glossary of Programming Text Prompts for a list of abbreviations.) The secondary display region is active in all modes of operation.

A five-button, tactile keypad is located on the front panel of the instrument. Four of the buttons are embossed to easily show their location. A fifth, hidden button located at the top, center of the keypad provides access to functions that are infrequently used (see Figure 2). The embossed keys do not have a pre-assigned function. Icons are energized over the key to indicate their function. If a key does not have an icon energized above its location, this key does not have a function and will not initiate an action when pressed. The first table below lists all key functions.

The Measure Mode is the normal operating mode of the transmitter and is the default mode upon power-up. The Measure Mode is the starting point for entry into other modes of operation. Each mode contains a unique set of transmitter functions or states. These modes and their related functions are listed in the second table below.

Icon	Key Function
Exit to MEASURE	Escapes back to the Measure Mode from all other modes or programming states of operation. This function is not available in the Measure Mode.
FAULT Info	Accesses information on diagnostic problem or error conditions. Displays this information as a short text string and code. This function is only available in the Measure Mode.
SELECT	Selects the mode or programming state of operation shown in the secondary display region.
ENTER	Stores configured items and data into memory.
NEXT	Increments through a series of programming states.
YES	Affirms the action that is about to take place.
NO	Denies the action that is about to take place.
MENU	Increments through the modes of operation.
▲	Increases numeric values or moves through a series of parameters.
▶	Moves the flashing data entry value one space to the right.
▼	Decreases numeric values or moves through a series of parameters.

Mode	Function
Measure	Used to display the process and secondary variables – the normal operating mode for the transmitter.
Calibrate	Used to calibrate input devices (i.e., the process and temperature sensors).
Out/Hold	Used for viewing critical parameters found in the Transducer and Analog Input Function Blocks.
Configure	Used to configure transmitter functions such as temperature compensation, temperature sensor type, and measurement electrode type.
Security	Used to enter password protection for the Calibrate and Configure Modes of Operation.
Display	Used to select the variable that will be shown in the secondary display region when the transmitter is in the Measure Mode of Operation.

MEASURE MODE

The Measure Mode is the normal operating mode of the transmitter. In this mode, the process variable, fault conditions, and secondary display information are displayed. From the Measure Mode, other modes of operation and fault information can be accessed.

When a user enters an operating mode or state and does not return to the Measure mode as the final step, the transmitter automatically returns to the Measure Mode of operation after 20 minutes of unattended use.

The process variable is shown in the primary display area. The value of this variable is dependent on the configured analyzer, temperature compensation type, temperature value, and sensor signal. The engineering units for the process variable are dependent only on the configured analyzer. The table below lists the analyzer types and corresponding engineering units.

Analyzer Type	Engineering Unit
Conductivity	mS/cm, µS/cm
Concentration	ppm, ppb, %, User Defined Text, No Units

The secondary display has the ability to show a large variety of information. Since the display area only has six characters, only one item can be shown at any given time. Typically, this region will be used for displaying the process temperature in degrees Celsius; however, it can be changed to display the process temperature in degrees Fahrenheit, sensor type, conductivity value and solute name for a concentration analyzer type, and firmware revision.

Fault information can only be accessed from the Measure Mode. During a fault condition, the FAULT warning icon above the process variable display region will blink. The FAULT Info key will also become active and can be used to obtain a text description of the fault condition. Pressing the FAULT Info key progressively moves from one fault to the next until all faults have been shown. Once all faults have been interrogated, the FAULT icon stops blinking and will remain energized until all faults have been removed. If a new fault condition is detected, the FAULT icon will begin to blink to inform the user of the newly detected condition.

The MENU key provides access to all other modes of operation. Pressing this key moves the transmitter to the next operating mode. Visual feedback is provided in two manners: the mode indication arrow moves to the next mode of operation (e.g., Calibrate) and the secondary display shows the text string representing the new mode of operation (e.g., CALIBR).

CALIBRATE MODE

The Calibrate Mode provides the ability to calibrate the sensor and temperature inputs. These functions include process variable, temperature, edit, and reset calibration. Figure 10 shows the Calibrate States and key assignments for each state.

Process Variable Calibrate State

The Process Variable Calibrate State contains two calibration procedures: Zero Point and Span Point. Each calibration procedure performs the described adjustment. For a new toroidal sensor, both a Zero and Span adjustment is required prior to commissioning the transmitter. During the life of the sensor, Zero and Span Point calibrations are recommended; however, the end user should determine the frequency and need for both calibration methods. If an incorrect calibration has been entered, the Reset Calibrate State provides the ability to return the transmitter calibration to factory settings.

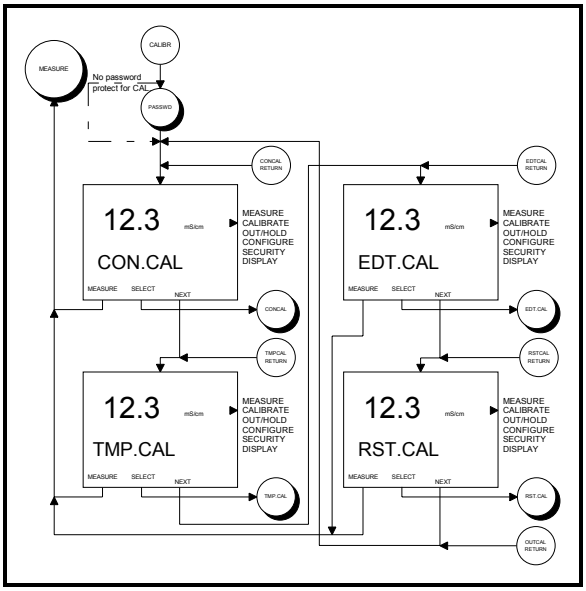

Figure 10 – Screen Flow Diagram for Calibrate Mode of Operation.

Since the transmitter can be configured as a Conductivity or Concentration analyzer, the calibration routines will automatically set the units of calibration to be the same as those for the measured process value. Thus, a Conductivity Analyzer type uses conductivity units and a Concentration Analyzer type uses the user-defined units set in the Configure Mode.

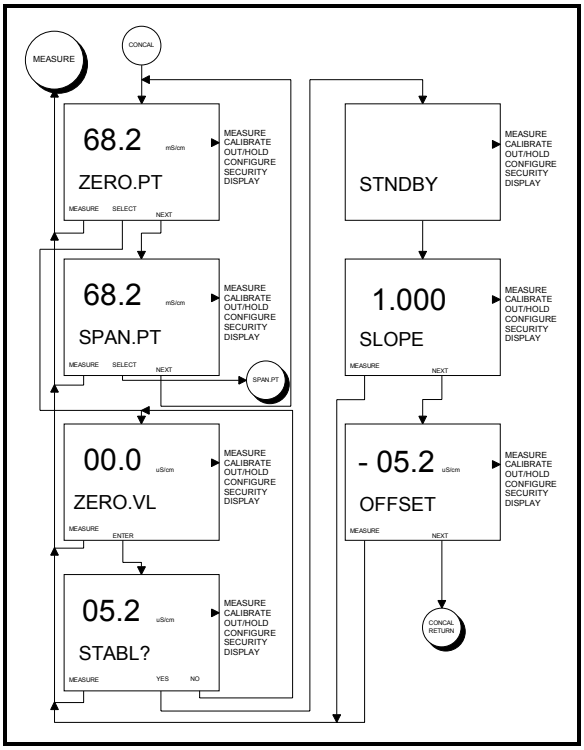

Figure 11 – Screen Flow Diagram for Process Variable Calibrate States of Operation

Zero Point Calibrate State

The Zero-Point Calibrate State conducts an offset adjustment. This calibration procedure is typically termed an Air Calibration since the calibration is conducted with the sensor out of the process liquid or a calibration standard. A Zero calibration must be conducted on all new sensors and should be conducted before initiating a Span calibration. Also, periodically conduct a Zero calibration as the sensor ages to ensure accurate performance.

Span Point Calibrate State

The Span-Point Calibrate State adjusts the slope (or gain) to match the sensor response characteristics. Due to the inherent installation effects of toroidal conductivity sensors, a Span calibration with the sensor in the final installed location will ensure the greatest measurement accuracy. When this type of calibration is not practical, a Span-Point Calibration can be completed using a known conductivity standard solution and a sample container having the same approximate shape, size, and material of the sensor receptacle/piping. For this method, position the sensor in the container hole the standard solution in the same manner as it would be in the final installed location.

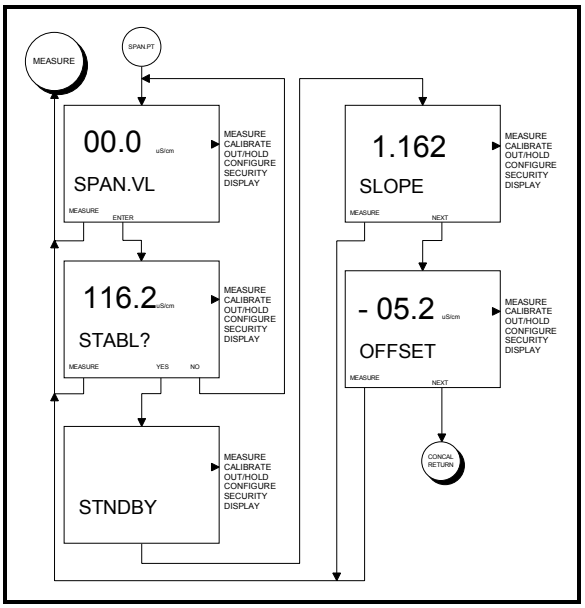

Invalid calibration values for both the Zero- and Span-Point calibration will generate one of three types of warnings: BAD.CAL (i.e., Bad Calibration), UNSTBL (i.e., Unstable), or DRIFT (i.e., Drifting measurement value). If a BAD.CAL condition is encountered, the calibration value will not be accepted. If an UNSTBL or DRIFT condition is encountered, the Slope and Offset values will be shown followed by a query to ACCEPT the calibration. Though the analyzer encountered a poor calibration value, pressing the YES Key can be used to ACCEPT this value. The NO Key rejects the calibration value. In both cases, the user is returned to the Process Variable Calibrate State (CON.CAL). If the calibration values are valid, the Efficiency (shown as a dimensionless value) will be shown. Pressing the NEXT key displays the Offset value. At this point, the user can return to the Process Variable Calibrate State by pressing the NEXT key or to the Measure Mode by pressing the Exit to MEASURE key.

Temperature Calibrate State

The Temperature Calibrate State is a smart calibration routine that allows for both single- and dual-point calibration. By calibrating the temperature at two points that are at least 20°C apart, the transmitter adjusts the offset and slope. Since this routine only uses the most recent calibration data, calibrations can be conducted throughout the sensor's life to ensure accurate measurement of the temperature. If an incorrect calibration has been entered, the Reset Calibrate State can restore the calibration to factory settings.

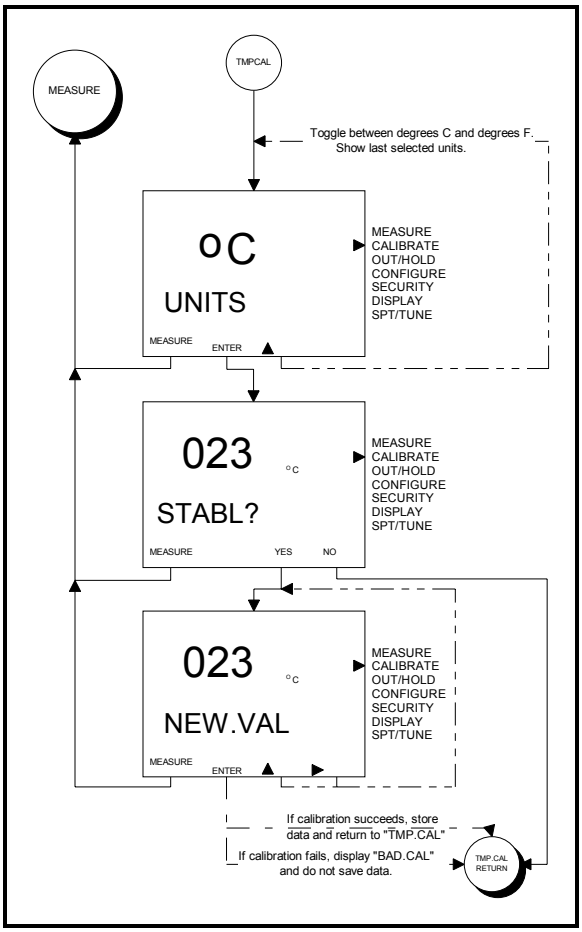

Figure 12 – Screen Flow Diagram for Temperature Calibrate State of Operation

Edit Calibrate State

The Edit Calibrate State allows a user to manually adjust the sensor and temperature slope and offset values. Though this function may not be suitable for many applications, the Edit Calibrate State facilitates quick and easy access to these calibration values for troubleshooting purposes and to make separate adjustments to process variable and temperature data.

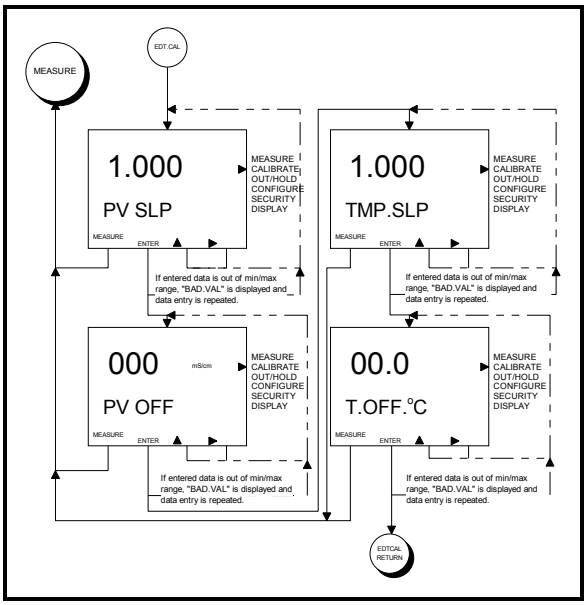

Figure 13 – Screen Flow Diagram for Edit Calibrate State of Operation

Reset Calibrate State

The Reset Calibrate State sets the sensor and temperature calibration data to factory values. This state purges calibration history and should be initiated before calibrating a new sensor.

When interrogating the calibration values after a reset has been performed, the slope and offset values for both the process and temperature sensors will be set to 100%/1.000 and 000 µS/cm/000C, respectively.

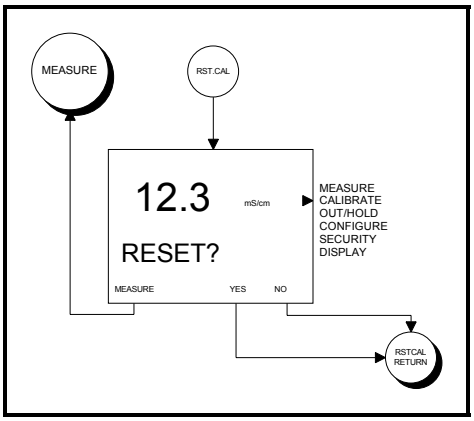

Figure 14 – Screen Flow Diagram for Reset Calibrate State of Operation

> **Note**
> The Reset Calibrate State will reset all calibration values; therefore, the process sensor and temperature sensor will require calibration after performing the Reset Calibrate procedure.

OUTPUT/HOLD MODE

The Output/Hold Mode provides the ability to view a limited number of Transducer Block (TB) and Analog Input (AI) Function Block parameters. Parameter viewing is limited to the TB Process Variable Range (RANGE_1), AI Block mode status, and AI Output Value.

The TB Range State contains the process value low and high range limits. These represent the range limits used to define the Output Value.

The AI Block information shows the current mode (i.e., Out of Service – OOS, Auto, or Manual) of the specified function block (i.e., AI1 or AI2). For in-service blocks, information for the Output is also shown. If the block is out of service, the output value will be equal to the corresponding AI Block FSAFE_VALUE.

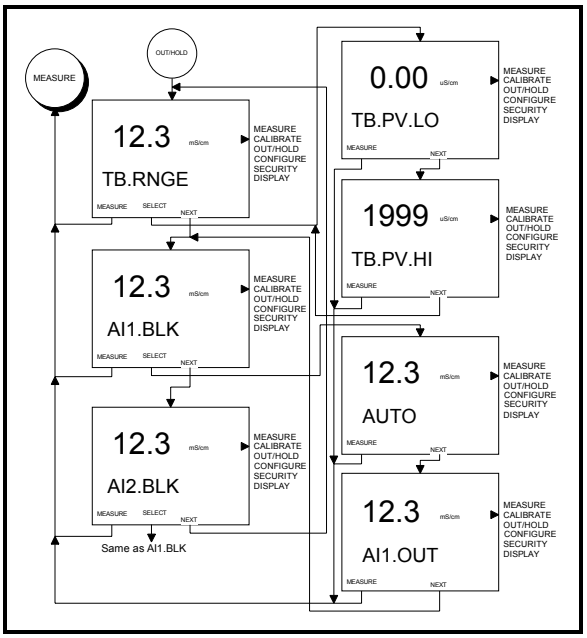

Figure 15 – Screen Flow Diagram for Output/Hold Mode and States of Operation

CONFIGURE MODE

The Configure Mode establishes the operating parameters of the transmitter. These parameters include analyzer type, temperature sensor type, temperature compensation type, and Primary Variable Limit values.

Upon selecting the Configure Mode at the local HMI, a query to Modify or View the configuration will be presented. The Modify Configure State enables analyzer options to be set and saved into memory.

Since the Modify State can be secured, the configuration of the transmitter can be viewed using the View Configure State without violating secured settings. To provide quick and easy access to edit transmitter parameters from the View Configure State, a Hot Key function provides immediate access to the viewed parameter using the ENTER key. If the Modify Configure State is secured, the security code will be requested before entering into the Modify Configure State.

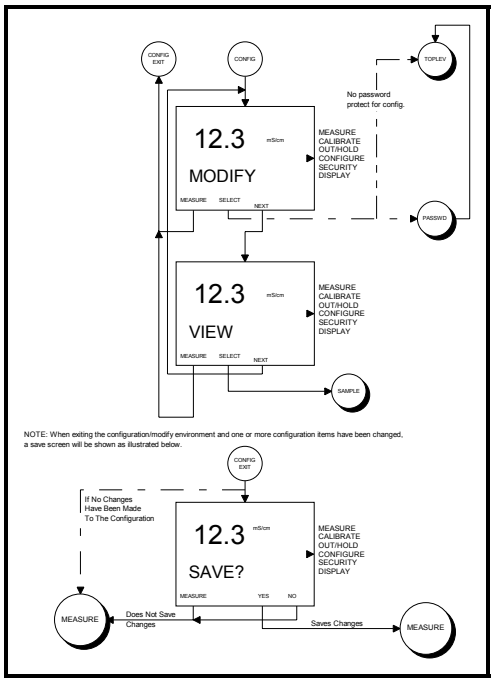

Figure 16 – Screen Flow Diagram for Modify/View and Save States of Operation

Any changes to the transmitter configuration must be saved. Pressing the Exit to MEASURE key prompts the user to "SAVE?" their changes. Pressing the YES key saves the new configuration and returns the transmitter to the Measure Mode. The NO key discards the changes and returns the transmitter to the Measure Mode.

The Modify Configure State contains all the available settings that establish the functionality of the transmitter. Upon receipt of the transmitter, the default configuration (unless otherwise specified by the customer when ordering the transmitter) will be active once the transmitter has been powered. See the Configuration Data Sheet at the end of this manual for default configuration settings. Before installing the transmitter, the configuration should be modified to reflect the final installed application. The Table below describes each of the Modify Configure States and their function.

State	Function
ANALYZR	Used to define the type of analyzer. Choices include Conductivity and Concentration.
TMP.SNS	Used to define the type of temperature sensor. Choices include None, Pt100, Pt1000, and 3k Balco.
TC.TYPE	Used to define the type of temperature compensation. Choices include Manual (0.1N KCl based), and Automatic, which can be set to one of the following: Standard KCl (0.1N KCl based), Temperature Coefficient (%/°C), 0 to 15% NaOH, 0 to 20% NaCl, 0 to 18% HCl, 0 to 20% H_2SO_4, and User-Defined.
PV.LIM	Used to set the Primary Variable High and Low Limit values.

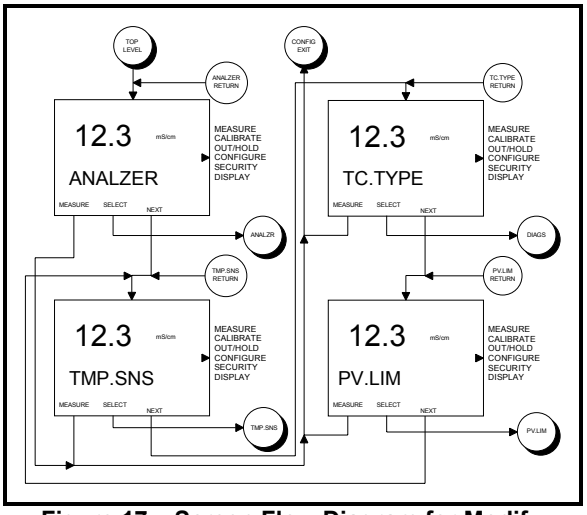

Figure 17 – Screen Flow Diagram for Modify Configure States of Operation

Analyzer State

The Analyzer State sets the type of measurement (i.e., Process Value). The measurements are conductivity and concentration. The Conductivity setting displays the Process Value using the engineering units of either mS/cm or µS/cm. The Concentration setting converts the measured temperature compensated conductivity to a solute weight percentage using either one of the canned concentration algorithms or a user-defined curve fit. Concentration units are set to percent or can be can separately defined for a user-defined curve fit.

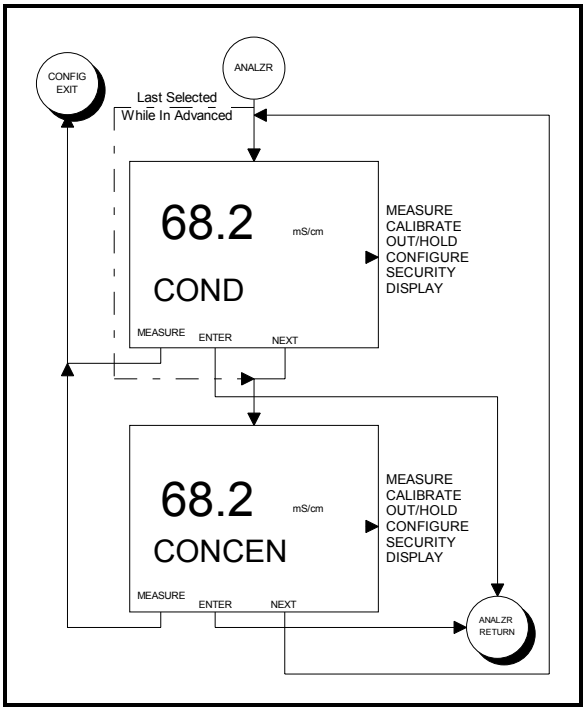

Figure 18 – Screen Flow Diagram for Analyzer States of Operation

The Concentration State converts conductivity values to concentration units. This state applies temperature-compensated conductivity measurements to a pre-defined or user-defined function that converts the conductivity measurements to concentration values. All concentration values have a fixed decimal point location.

The Concentration State provides the following pre-defined concentration algorithms:

- 0 to 15% Sodium Hydroxide (NaOH)
- 0 to 20% Sodium Chloride (NaCl)
- 0 to 18% Hydrochloric Acid (HCl)
- 0 to 20% Sulfuric Acid (H_2SO_4)

These pre-defined configurations are based on data from the International Critical Tables.

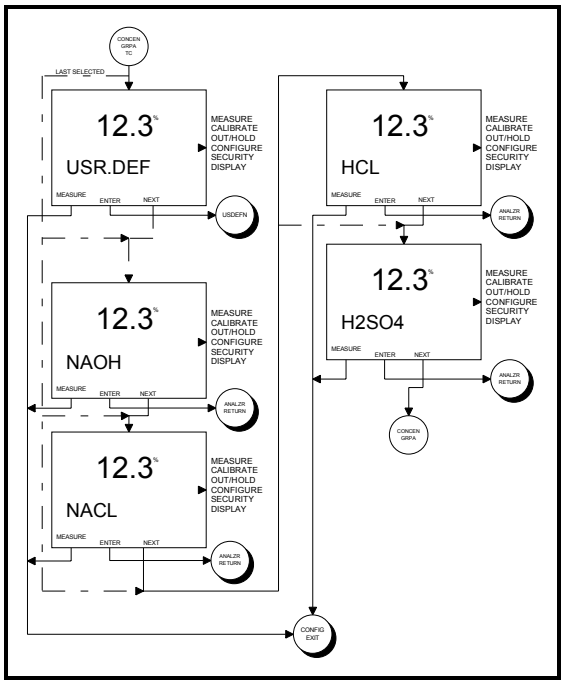

Figure 19 – Screen Flow Diagram for Canned Concentration States of Operation

The user-defined configuration provides capability for selecting an Engineering Unit icon, decimal point position, custom text description, and six-point curve fit. The Engineering Unit icon options include percent (%), parts-per-million (ppm), part-per-billion (ppb), and no Engineering Unit icon.

The six-point curve fit sets the end-point and break point values of the desired conductivity-to-concentration conversion. The end-point values define the full-scale output range, and the break point values identify the transition points between the five line segments defining the conductivity-to-concentration curve.

To define the end-point and break point values, a plot of temperature-compensated conductivity against solute concentration must be divided into five line segments that best approximate the shape of the conductivity-to-concentration curve. The beginning of the first and end of the fifth line segment identify the end-points of the approximation and output range.

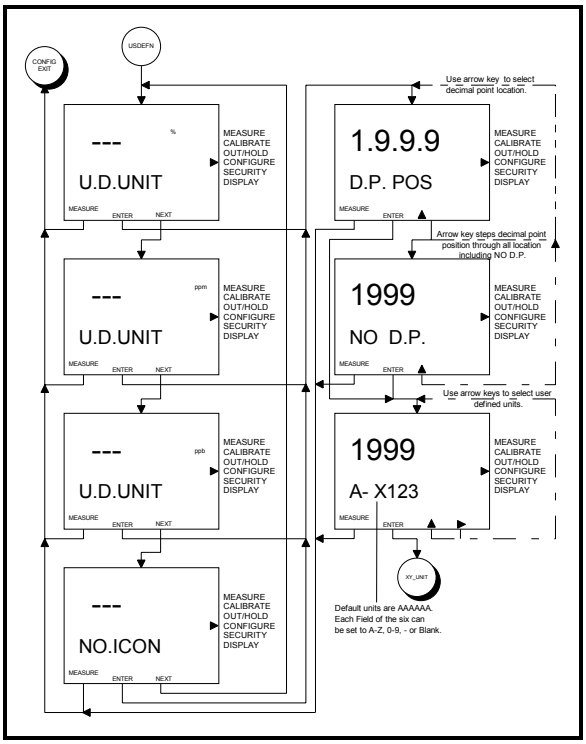

Figure 20 – Screen Flow Diagram for User-Defined Concentration State of Operation.

To illustrate the use of the User-Defined Concentration State, data for 0 to 45% NH_4NO_3 is plotted showing the various break and end-points. As seen by this example, the conductivity-to-concentration curve is a non-linear function, which has been divided into five line segments. The end-point values represent point numbers 1 and 6, while the break point values represent point numbers 2 through 5.

Point Number	Ammonium Nitrate Conductivity (mS/cm)	Ammonium Nitrate Concentration (%)
1	0	0
2	55	5
3	105	9
4	195	16
5	310	28
6	400	45

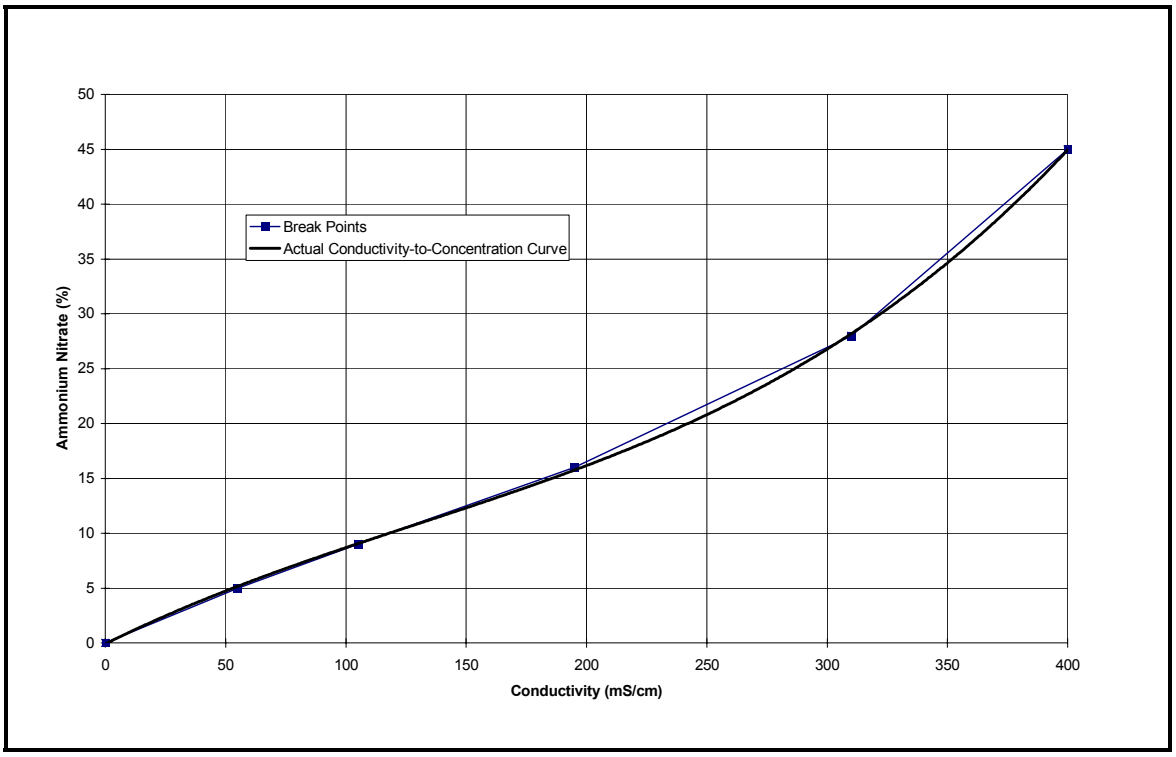

Figure 21 – Conductivity-to-Concentration Break Point Determination

Temperature Sensor State

The Temperature Sensor State configures the transmitter for use with a Pt100, Pt1000, 3 kohm Balco, or no RTD (NONE).

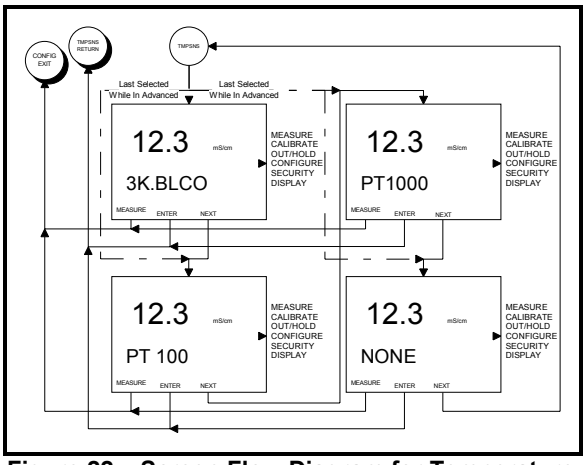

Figure 22 – Screen Flow Diagram for Temperature Sensor State of Operation

Temperature Compensation State

Temperature has a marked effect on the conductance of solutions. The effect is generally non-linear and dependent on the particular ionic species and their concentration.

The TB82TC Profibus PA Transmitter contains a number of preprogrammed correction algorithms that compensate the effect of temperature on conductivity to a user-defined reference temperature (typically 25°C). Thus, the displayed and transmitted process value will be accurate and stable when the process temperature varies.

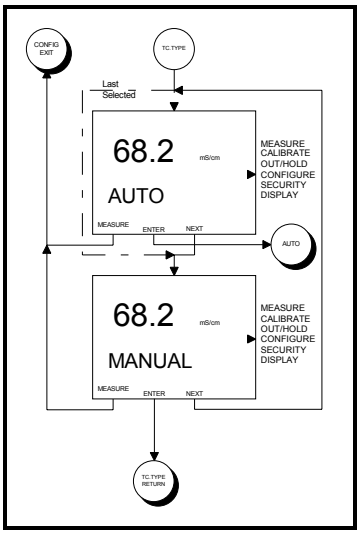

Figure 23 – Screen Flow Diagram for Temperature Compensation State of Operation.

The options for temperature compensation are grouped into two sets: MANUAL and AUTO (Automatic). MANUAL temperature compensation contains no additional options and is locked to a specific process temperature independent of the selected temperature sensor. If a different fixed temperature is desired, the new temperature can be adjusted by completing a temperature calibration to the desired temperature value.

The AUTO compensation options use the measured temperature value. AUTO compensation algorithms include the following Temperature Compensation States:

State	Function
STD.KCL	Standard Potassium Chloride (KCl). Compensation is 0.1N KCl based. Manual Compensation only uses this algorithm.
TC.COEF	Temperature Compensation Coefficient. Compensation is based on a percent change of the conductivity at the reference temperature per degree Celsius.
NAOH	Sodium Hydroxide. Compensation is 0 to 15% Sodium Hydroxide (NaOH) based.
NACL	Sodium Chloride. Compensation is 0 to 20% Sodium Chloride (NaCl) based.
HCL	Hydrochloric Acid. Compensation is 0 to 18% Hydrochloric Acid (HCl) based.
H2SO4	Sulfuric Acid. Compensation is 0 to 20% Sulfuric Acid (H_2SO_4) based.
USR.DEF	User-Defined. Compensation is defined as a ratio of uncompensated conductivity over compensated conductivity for a specific set of temperatures.

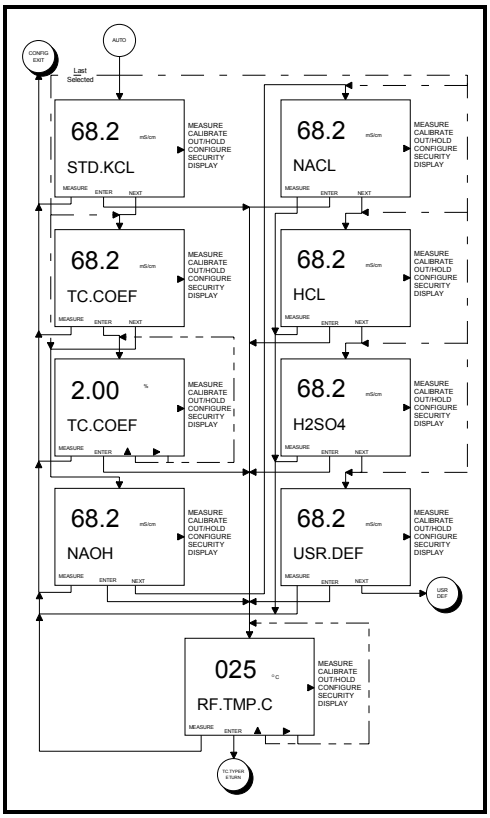

Figure 24 – Screen Flow Diagram for Automatic Temperature Compensation States of Operation

The User-Defined temperature compensation option requires uncompensated conductivity data from the reference temperature (typically 25°C) to the maximum process temperature on a representative sample of process solution. With this data, the ratio of uncompensated conductivity to conductivity at the reference temperature is calculated. These ratios are then plotted against the temperature.

To illustrate the use of the User-Defined Temperature Compensation State, an example of a possible conductivity data set is shown below. Once the data is plotted, the non-linear plot is segmented into five linear sections. The break points, which are listed in the first and third columns in the table below, are used for the data that is entered into the User-Defined Temperature Compensation States.

Temperature (°C)	Uncompensated Conductivity (mS/cm)	Conductivity Ratio (K/K_{STD})
0	7.21	0.70
25	10.3	1.00
50	12.25	1.19
75	12.97	1.26
100	12.82	1.24
200	9.06	0.88

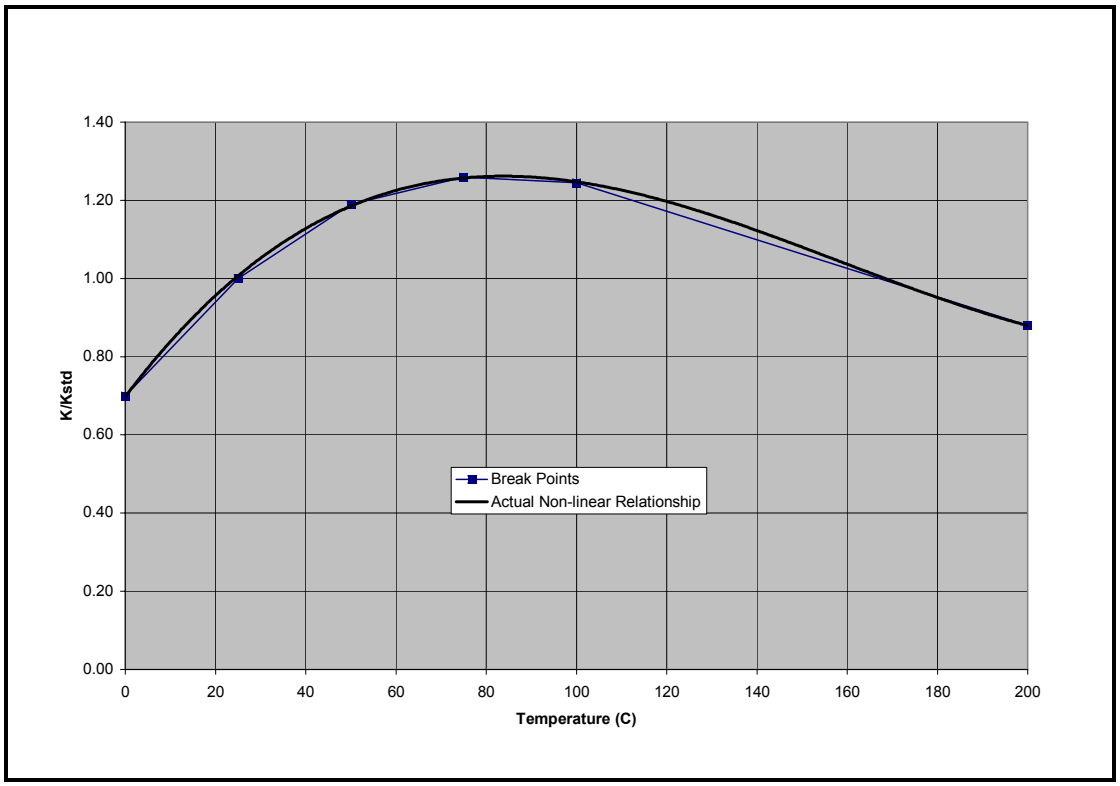

Figure 25 – User-Defined Temperature Compensation Break Point Determination

Primary Variable Limit State

The Primary Variable Limit State provides a method to customize the trigger points for the primary variable diagnostic limit values. Both the high and low limit values can be independently defined. Allowable limit values are restricted to the primary variable range as listed in the specification section.

When one of the limit values has been exceeded, a diagnostic alarm is transmitted onto the bus either as a high primary variable (i.e., HI.PV) or low primary variable (i.e., LO.PV) condition depending on which limit value was exceeded.

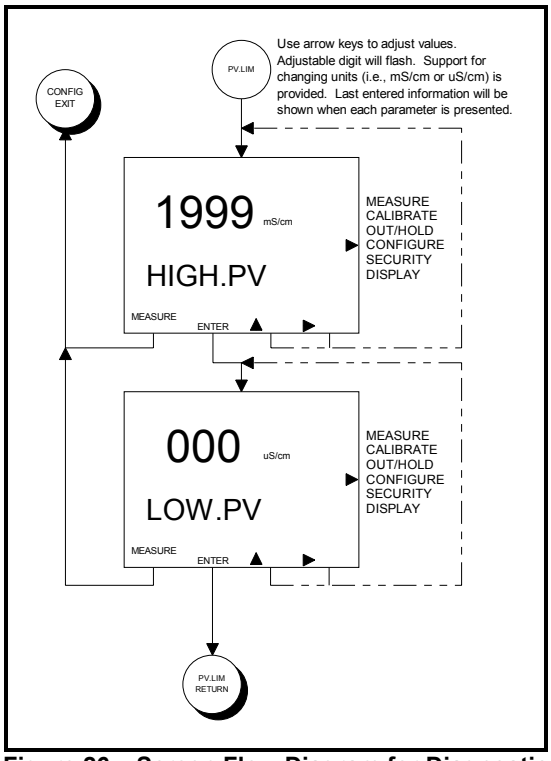

Figure 26 – Screen Flow Diagram for Diagnostic State of Operation

SECURITY MODE

The Security Mode establishes password protection against unauthorized changes to transmitter functions. Password protection can be assigned to the Security, Calibrate, and Configure Modes. Additional Security functions are available in the Physical Block and will be discussed in Physical Block Section.

The Security Mode provides password protection of critical operating environments. When in the Security Mode, toggling the primary display between security OFF and ON sets password protection for the mode displayed in the secondary display area. When one or more modes have been secured, the security password must be correctly entered at the Password State before entry into the Security Mode is allowed. One password assignment applies to all secured modes.

To prevent misuse of the security function by a malicious user, the Security Mode can be password protected without securing one or both other modes of operation.

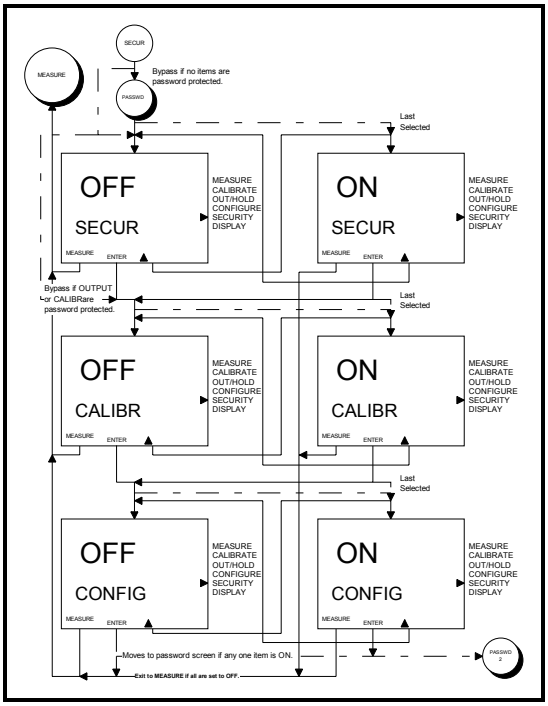

Figure 27 – Screen Flow Diagram for Security Mode of Operation

SECONDARY DISPLAY MODE

The secondary display region can be configured to display one of a multitude of process, sensor, or transmitter parameters in the Measure Mode. The Secondary Display Mode provides the ability to view these parameters or to set one parameter active in the Measure Mode. These parameters include temperature in °C, temperature in °F, sensor type, compensated conductivity (concentration analyzer type only), user-defined text description (concentration analyzer type only), temperature uncompensated conductivity, and software revision. The NEXT key cycles through the parameters, while the ENTER key sets the displayed parameter as the secondary display value when in the Measure Mode.

To distinguish between the temperature uncompensated and temperature compensated conductivity, the process values use the minor differences in the displayed engineering units. For temperature uncompensated conductivity, the engineering unit will be displayed as ‘^{m}S’ or ‘^{u}S’ units (with superscript ‘m’ and ‘u’). For temperature compensated conductivity, the engineering unit will be displayed as ‘MS’ or ‘US’ (without superscript).

For temperature parameters, a superscript ‘M’ at the end of the temperature value indicates that the transmitter’s Temperature Compensation State is set to Manual.

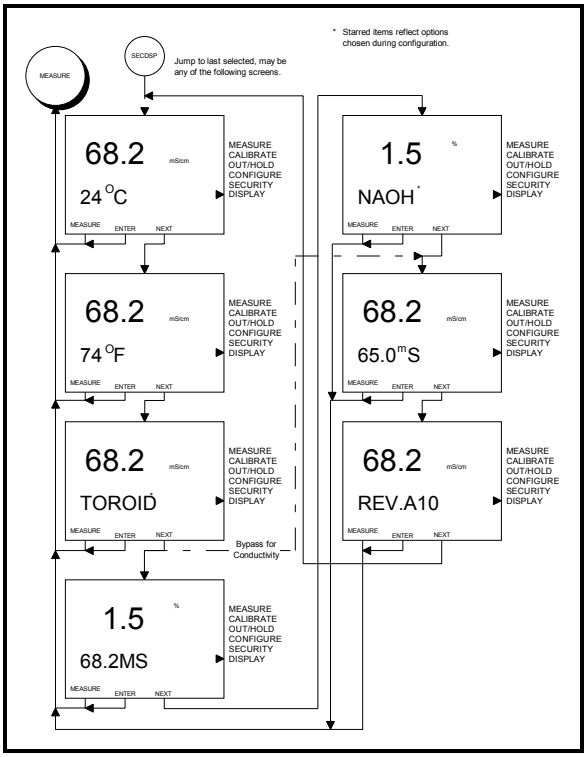

Figure 28 – Screen Flow Diagram for Secondary Display Mode of Operation

UTILITY MODE

The Utility Mode provides access to powerful functions not used during normal operating conditions. These functions have been separated into two categories: Factory and User. Factory functions are strictly reserved for factory personnel. User functions include Reset Configuration to default settings, Reset Security password, Reset All parameters to default settings, Software Reboot, setting the Device Address, entering the Device Serial Number, setting the Device Identification that determines the active device profile, and Damping functions.

The User States can be accessed using the hidden fifth key located top, center of the keypad above the display window (see Figure 2). Once the hidden key has been pressed, the secondary display will have the prompt 'USER' shown. The SELECT key provides access to the User States.

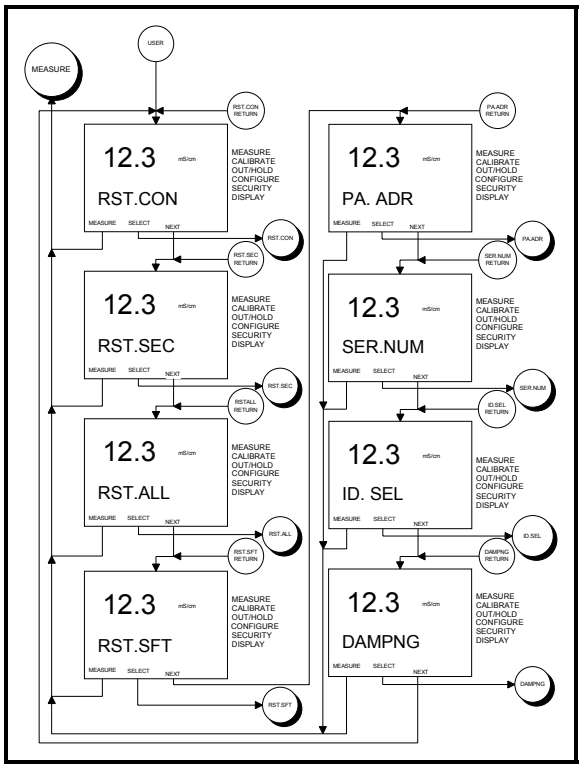

Figure 29 – Screen Flow Diagram for User States of Operation

Caution
Since the Utility Mode contains functions that can have a dramatic effect on the proper function of the transmitter, the Analog Input Blocks should be put Out Of Service until all transmitter parameters have been properly set.

Reset Configuration (RST.CON) State

The Reset Configuration State returns the configuration to factory default settings. If the Configure Mode has been password secured, the same password will be required to perform a reset to the transmitter's configuration. See the Configuration Worksheet at the end of this manual for software default settings.

Reset Security (RST.SEC) State

The Reset Security State returns the security to factory default settings. The factory default is security OFF for all applicable modes (i.e., Security, Calibrate, and Configure). To reset the security, the password **732** must be entered when requested by the transmitter.

Reset All (RST.ALL) State

The Reset All State returns all transmitter parameters back to factory defaults. This includes calibration, configuration, security, and secondary display values. To reset all transmitter parameters, the password **255** must be entered when requested by the transmitter.

Note:
All user specific information will be lost once a Reset All or Reset Configuration has been initiated. Before initiating these reset functions, record configuration data to make reconfiguration quicker.

Reset Software (RST.SFT) State

The Soft Boot State initiates a software reset. A software reset repeats the boot-up and self-test process. All programmable instrument parameters are unaffected by this function.

Profibus PA Address (PA. ADR) State

Each device on a bus segment must have a unique address. An address range of 0 to 126 is possible. The default address of the TB82TC Profibus PA Transmitter as well as most competitive devices is 126; thus before operating two or more new devices on a single segment, the address should be set to a new value.

The PA Address State facilitates access to the device address. When changing the address to a value less than 100, always use a leading zero (e.g., 050).

Serial Number (SER.NUM) State

The device serial number represents a unique production number of the device assigned by the manufacturer. Since this identifier must have a unique value, the Serial Number State is password protected to prevent the accidental modification of its value; however, if access is required, contact the factory for further instructions.

Device Identification Select (ID. SEL) State

A Profibus host uses the device address and identification number to identify Profibus devices. Identification (ID) numbers can be Profile or Manufacturer specific. The TB82TC transmitter ID can be set to one of the following:

- Profile specific ID for Profibus PA 3.0 Analyzer (9750 Hex).
- Manufacturer specific ID provided by PNO (5104 Hex).

The TB82TC device meets all requirement of the PROFIBUS PA 3.0 Analyzer Profile using either setting; however, the Manufacturer Specific ID fully utilizes all the built-in functionality of the TB82 transmitter. When using the Manufacturer Specific ID, the manufacturer GSD (ABB_5104.GSD), DTM, or EDD device file must be used.

When using the Profile Specific ID, the standard PROFIBUS PA 3.0 Analyzer GSD device file provided by the PNO (PA139750.GSD) must be used.

Damping (Damping) State

The Damping State applies a lag function on the process input. The Damping State value affects Process and Secondary Value 2 (Concentration or Conductivity value based on TB settings) transmitted values. Application of the FV_VALUE in the AI blocks will apply an additional damping on the mapped variable. To adjust the Damping State, the password **367** must be entered when requested by the transmitter.

TRANSMITTER'S FIELDBUS FUNCTIONALITY

The TB82 Profibus PA transmitter series meets the requirements outlined in the Analyzer Profile for Process Control Devices, Version 3.0, published by the PROFIBUS-PA Working Group. Profibus is a vendor-independent fieldbus standard for manufacturing and process automation and for building technologies. This fieldbus technology is defined in the international standard EN50170 that is available to all vendors of such equipment. The Profibus family encompasses three types of protocols:

• PROFIBUS-DP (Decentralized Peripherals)
• PROFIBUS-PA (Process Automation)
• PROFIBUS-FMS (Field Message Specifications)

Since these protocols are compatible, they can be combined in a single Profibus network. PROFIBUS-DP and PROFIBUS-PA are specific designed for process automation.

Profibus PA device communications uses the same pair of bus wires that provide power to the device. Two types of digital communication travel on a Profibus network: cyclic and acyclic. Field devices provide real time process data to automation systems. This information is provided by cyclic services and includes information on the quality of the process data. Alarms, diagnostic data, and device configuration settings are also transmitted; however, these communications must be scheduled and are acyclically transmitted.

The PA profile provides the necessary structure for field device interchangeability and interoperability by using the internationally recognized function block model. Below is a complete list of the function block contained in the transmitter:

- **Physical Block**: This block contains general device information such as device name, manufacturer, version and serial number.
- **Analog Input Function Block**: This block provides the value measured by the sensor and includes parameter status and scaling. Two Analog Input Function Blocks are available for control loop operations.
- **Transducer Block with calibration capability**: This block contains configuration parameters, calibration functions, and diagnostic data.

The transmitter allows different types of communication services as described by the Fieldbus Message Specification (FMS) Communication Profile. This profile defines the monitoring, control, regulation, operation, alarm handling, and archiving of automation systems.

Electronic Device Data (GSD Files)

Electronic device data sheets (i.e., GSD files) contain device information for device configuration and commissioning tools. The definition of each device parameter within the GSD reduces the need of an operator to consult the product instruction manual. The TB82 GSD files are available free of charge on the PROFIBUS homepage at www.profibus.com or on the ABB website at www.abb.com.

Identification Number

Profibus slaves and Class 1 master devices must be assigned an Identification (ID) number. Class 1 master devices use the ID numbers to identify the types of devices on a particular segment. These numbers are used to compare the connected devices to the ID number specified by the configuration tool. Data transfer from the configuration tool will not be initiated unless the ID numbers match. The TB82TC Profibus PA transmitter can be configured to use either the Manufacturer Specific ID number (5104 Hex) or the standard Analyzer Profile 3.0 ID number (9750 Hex).

Electronic Device Description (EDD)

Electronic Device Description files define the device properties of the field device. These files provide the information that is used by engineering tools to simplify configuration and commissioning tasks. Device diagnostics are also decoded and quite usefully when maintenance of the field device is necessary.

Device Type Manager (DTM)

The PROFIBUS User Organization has defined a system-wide device management technology: Fieldbus Device Tool (FDT). FDT provides a manufacturer-independent method of configuring, commissioning, and managing intelligent field devices using one engineering tool. Device parameterization is provided in the form of a Device Type Manager (DTM). A DTM functions in the same manner as a device driver, similar to those used on Personal Computers (PC). For PC's, device drivers integrate hardware components into the overall computer system (i.e., software and other hardware components). In a similar manner, a DTM contains all the functions and dialogs, including the user interface for the configuration, diagnosis and servicing of the fieldbus device.

DEVICE BLOCKS

All variables and parameters of the transmitter are structured in blocks with respect to their assignment of components or functions. This structure represents the hardware and software makeup of the device and has been designed to support primary operational characteristics of the transmitter.

Blocks are logical groups of device functionality that define a particular application using a common model. In general, blocks process input parameters and events through one or more process algorithms and execution controls in order to produce the expected output parameters and events. Block parameters control the function and execution of the block and are visible over the fieldbus network.

Three types of blocks contain the profile parameters: Physical Block, Transducer Block, and Function Block.

The Physical Block contains the hardware specific characteristics associated with a device. This block does not have input and output parameters; instead, it contains an algorithm that monitors and controls the general operation of the physical device hardware. Physical Block parameters include but are not limited to the manufacturer's name, device name, and identification number. Only one Physical Block is included per device.

The Transducer Blocks connect input and output functions to the function blocks residing in the same device. It interfaces with sensor input hardware and provides a measured value and status to the connected function blocks. Transducer Block parameters include but are not limited to sensor type, temperature sensor type, calibration data and routines, calibration date and diagnostic conditions. Usually at least one Transducer Block is present per device.

The Function Blocks are fundamental for providing the control system behavior. Typical Function Blocks include Analog Input (AI) and Analog Output (AO) Blocks. The number of Function Blocks within a device is not limited.

The TB82TC Profibus PA Transmitter has one Physical Block, two Analog Input Function Blocks (AI), and one Transducer Block with calibration. The following figure shows block elements for the TB82TC Profibus PA Transmitter.

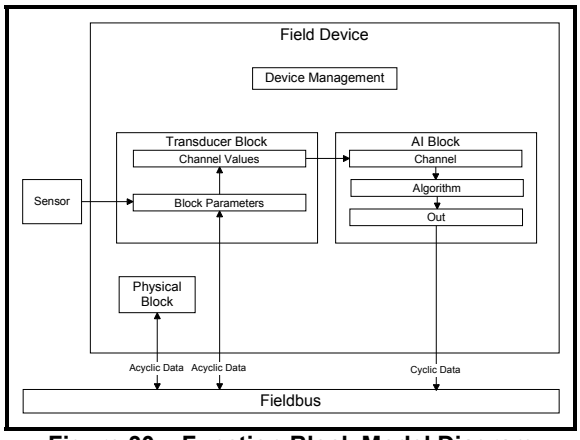

Figure 30 – Function Block Model Diagram

The following tables and diagrams contain information regarding block parameters and the structure of these parameters within the block. To assist in the interpretation of this information, the following list of column definitions is provided.

- Object Name – Lists the mnemonic character designation for the block object.
- Slot Number (Snum) -
- Slot Index (Sidx) – Defines the number corresponding to the sequence of the parameter relative to the beginning of the corresponding block in the object dictionary.
- Relative Index (Ridx) – The relative index is a logical offset of a parameter in a block.
- Object Type – Object type of the parameter value.
- Data Type – Data type of the parameter value. This is either a simple variable name or a Profibus Data Structure number (DS-n).
- Description – Provides a short text description of the block object.
- Bytes – Lists the memory size of the block parameter.
- Store - Defines the type of variable for the block parameter. 'S' represents a Static, non-volatile variable that is typically a device parameter such as the type of temperature sensor or variable linearization function. This variable can only be written during an acyclic process and if the Access is Read/Write. Writing to a static parameter changes the static revision of the counter ST_REV. 'N' represents a Non-volatile variable that does not update the static revision. 'D' represents a Dynamic variable. The value for this variable is calculated by the block and can be read by another block. 'C" represents a Constant. This parameter does not change in the device.
- Access – Defines the access rights of the block parameter. 'R' represents a parameter that only has Read access. 'R/W' represents a parameter that has Read and Write access.
- Default – Lists the default setting for the listed block parameter during initial start up or when a Cold Start is initiated.
- Valid Range – Lists the valid range of selections for the listed block parameter.
- Note – Identifies additional information for the listed block parameter that is available at the end of the block object tables.

Device Management defines the directory of supported blocks and block parameters. The following table lists the Device Management parameter information.

DEVICE MANAGEMENT

Object Name	Description	Slot	Slot Index	Relative Index	Object Type	Data Type	Bytes	Store	Access	Default	Valid Range	Note
Standard Parameters												
HEADER	Directory Object Header	1	0		Array	Unsigned16	12	C	R			
COMPOSITE_LIST_ DIRECTORY_ENTRY	Directory Index	1	1		Array	Unsigned16	12	C	R			
COMPOSITE_ DIRECTORY_ENTRY	Directory Entries	1	2		Array	Unsigned16	16	C	R			
Reserved	Reserved	1	3 to 13									

The Physical Block includes data and parameters that defined the overall operation of the device. These parameters describe the hardware specific characteristics of the device. The following table lists the Physical Block parameter information.

PHYSICAL BLOCK

Object Name	Description	Slot	Slot Index	Relative Index	Object Type	Data Type	Bytes	Store	Access	Default	Valid Range	Note
Standard Parameters												
BLK_DATA	Block Data	0	180	0	Record	DS-32	20	C	R			
ST_REV	Static Revision	0	181	1	Simple	Unsigned16	2	N	R			
TAG_DESC	Tag Description	0	182	2	Simple	OctetString	32	S	RW	Spaces		
STRATEGY	Strategy	0	183	3	Simple	Unsigned16	2	S	RW	0		
ALERT_KEY	Alert Key	0	184	4	Simple	Unsigned8	1	S	RW	0		
TARGET_MODE	Target Mode	0	185	5	Simple	Unsigned8	1	S	RW	0x08	0x08 =AUTO	
MODE_BLK	Block Mode	0	186	6	Record	DS-37	3	D	R			
	Actual				Simple	Unsigned8	1	D	R	0X08=AUTO		
	Permitted				Simple	Unsigned8	1	D	R	0X08=AUTO		
	Normal				Simple	Unsigned8	1	D	R	0X08=AUTO		
ALARM_SUM	Alarm Summary	0	187	7	Record	DS-42	8	D	R			
	Current				Simple	OctetString	2	D	R			M
	Unreported				Simple	OctetString	2	D	R			N
	Unacknowledged				Simple	OctetString	2	D	R			N
	Disabled				Simple	OctetString	2	D	R			N
Standard Physical Block Parameters												
SOFTWARE_ REVISION	Software Revision	0	188	8	Simple	VisibleString	16	C	R	Current Revision		
HARDWARE_ REVISION	Hardware Revision	0	189	9	Simple	VisibleString	16	C	R	Current Revision		
DEVICE_MAN_ID	Manufacturer Identification	0	190	10	Simple	Unsigned16	2	C	R	26 (ABB)		
DEVICE_ID	Device Identification	0	191	11	Simple	VisibleString	16	C	R	TB82TC PA 3.0		
DEVICE_SERIAL_ NUM	Device Serial Number	0	192	12	Simple	VisibleString	16	C	R			
DIAGNOSIS	Device Diagnosis Information	0	193	13	Simple	OctetString	4	D	R			
DIAGNOSIS_ EXTENSION	Additional Device Diagnosis Information	0	194	14	Simple	OctetString	6	D	R			
DIAGNOSIS_MASK	Definition of supported Diagnosis	0	195	15	Simple	OctetString	4	C	R	0x33, 0xBC, 0x00, 0x80		
DIAGNOSIS_MASK_ EXTENSION	Definition of supported Extended Diagnosis	0	196	16	Simple	OctetString	6	C	R	0x07, 0x00….		
DEVICE_ CERTIFICATION	Device Certification	0	197	17	Simple	VisibleString	32	C	R			
WRITE_LOCKING	Software Write Protection	0	198	18	Simple	Unsigned16	2	N	RW	2457	0=Locked; 2457=Unlocked	
FACTORY_RESET	Restore Factory Defaults	0	199	19	Simple	Unsigned16	2	S	RW		1=Reset; 2506=Warm Start; 2712=Reset Bus Address	
DESCRIPTOR	Descriptor	0	200	20	Simple	VisibleString	32	S	RW	Spaces		
DEVICE_MESSAGE	Device Message	0	201	21	Simple	VisibleString	32	S	RW	Spaces		
DEVICE_INSTAL_ DATE	Device Installation Date	0	202	22	Simple	VisibleString	16	S	RW	Spaces		
LOCAL_OP_ENA	Local Operator Interface Enable	0	203	23	Simple	Unsigned8	1	N	RW	1	0=Disabled; 1=Enabled	
IDENT_NUMBER_ SELECTOR	Identification Number Selector	0	204	24	Simple	Unsigned8	1	S	RW		0=Profile-Specific ID 1=Mfgr-Specific ID	
HW_WRITE_ PROTECTION	Hardware Write Protection	0	205	25	Simple	Unsigned8	1	D	R	0	0=Disabled; 1=Enabled	
Analyzer Specific Physical Block Parameters												
DEVICE_ CONFIGURATION	Device Configuration	0	216	36	Simple	VisibleString	32	N	R	"Transducer Block (TB) PV = Conductivtiy Value	"TB PV = Conductivity Value "TB PV = Concentration Value" (Based on TB_PRIMARY_VALUE_TYPE)	
INIT_STATE	Initialization State	0	217	37	Simple	Unsigned8	1	S	RW	2	2=Run	
DEVICE_STATE	Device State	0	218	38	Simple	Unsigned8	1	D	RW	2	2=Run; 5=Maintenance	L
GLOBAL_STATUS	Global Status	0	219	39	Simple	Unsigned16	2	D	R			
TB82TC Specific Physical Block Parameters												
LCD_SECONDARY	Local Secondary Display	0	228	48	Simple	Unsigned8	1	S	RW	0	0=Deg.C; 1=Deg.F; 2=Sensor Type; 3=Conductivity; 4=Concentration Text; 5=Uncompensated Conductivity; 6=Software Revision Table 5	
SECURITY_LOCK	Security Lock	0	229	49	Simple	Unsigned8	1	S	RW	1	0=Locked; 1=Unlocked	
CONFIGURATION_ LOCK	Configuration Mode Lock	0	230	50	Simple	Unsigned8	1	S	RW	1	0=Locked; 1=Unlocked	
CALIBRATION_LOCK	Calibration Mode Lock	0	231	51	Simple	Unsigned8	1	S	RW	1	0=Locked; 1=Unlocked	
PASSWORD	Security Password	0	232	52	Array	Unsigned8	3	S	RW	000	000 to 999	
DEV_ADD	Device Address	0	233	53	Simple	Unsigned8	1	S	RW	126	2 to 126	
PRIVATE_SW_REV	Private Software Revision	0	234	54	Simple	VisibleString	6	C	R	Current Revision		
PRIVATE_HW_REV	Private Hardware Revision	0	235	55	Simple	VisibleSting	6	C	R	Current Revision		
VIEW_1	View 1	0	240	60	View_1	OctetString	20	C	R			I

The Transducer Block contains block parameters that configure the device's functionality. It insulates the sensor characteristics and signal conditioning from the other device Function Blocks. Specifically, it interprets the sensor signal based on configured values, applies factory and process calibration data, compensates for temperature and process effects, and converts the resulting values in the configured Engineering Units that can be used by the Analog Input Blocks contained within the device.

The following diagram illustrates the Transducer Block design. Note, AI1 is permanent linked to the Primary Variable. Only AI2 can be set to either the Primary Variable or any one Secondary Variable.

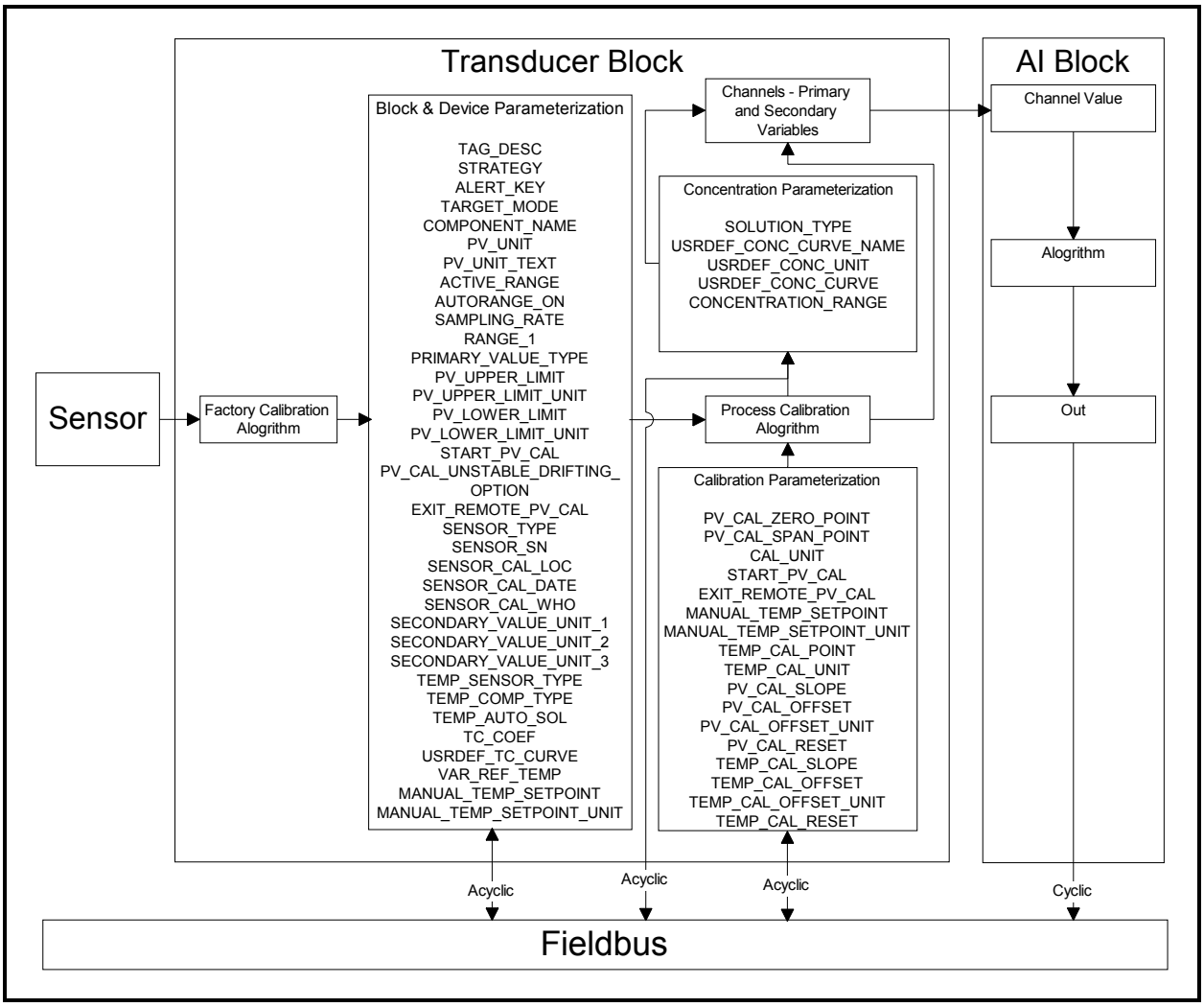

Figure 31 – Transducer Block Design Diagram

The following table lists the Transducer Block parameter information.

CONDUCTIVITY/CONCENTRATION TRANSDUCER BLOCK

Object Name	Description	Slot	Slot Index	Relative Index	Object Type	Data Type	Bytes	Store	Access	Default	Valid Range	Note
Standard Parameters												
BLK_DATA	Block Data	1	80	0	Record	DS-32	20	C	R			
ST_REV	Static Revision	1	81	1	Simple	Unsigned16	2	N	R			
TAG_DESC	Tag Description	1	82	2	Simple	OctetString	32	S	RW	Spaces		
STRATEGY	Strategy	1	83	3	Simple	Unsigned16	2	S	RW	0		
ALERT_KEY	Alert Key	1	84	4	Simple	Unsigned8	1	S	RW	0		
TARGET_MODE	Target Mode	1	85	5	Simple	Unsigned8	1	S	RW	0x08	0x08 =AUTO	
MODE_BLK	Block Mode	1	86	6	Record	DS-37	3	D	R			
	Actual				Simple	Unsigned8	1	D	R	0X08=AUTO		
	Permitted				Simple	Unsigned8	1	D	R	0X08=AUTO		
	Normal				Simple	Unsigned8	1	D	R	0X08=AUTO		
ALARM_SUM	Alarm Summary	1	87	7	Record	DS-42	8	D	R			
	Current				Simple	OctetString	2	D	R			M
	Unreported				Simple	OctetString	2	D	R			N
	Unacknowledged				Simple	OctetString	2	D	R			N
	Disabled				Simple	OctetString	2	D	R			N
Analyzer Profile Specific Transducer Block Parameters												
COMPONENT_NAME	Measurement Value	1	88	8	Simple	OctetString	32	S	RW	TB82TC Conductivity, Concentration		
PV	Primary Variable	1	89	9	Record	DS-60	12	D	R			
	PV Value in Primary Variable Unit				Simple	Float	4	D	R			
	PV Status				Simple	Unsigned8	1	D	R			
	PV Time (Not Used)				Simple	Date	7	D	R			
PV_UNIT	Primary Variable Unit	1	90	10	Simple	Unsigned16	2	S	RW	1552	1302=mS/cm; 1342=%; 1423=ppm; 1424=ppb; 1552=uS/cm; 1997=None	
PV_UNIT_TEXT	Additional Unit Information	1	91	11	Simple	OctetString	8	S	RW	Spaces		
ACTIVE_RANGE	Number of the currently active range	1	92	12	Simple	Unsigned8	1	S	RW	1	1	
AUTORANGE_ON	Auto-range Switch	1	93	13	Simple	Boolean	1	S	RW	1	0 = Auto range OFF 1 = Auto range ON	
SAMPLING_RATE	Sampling Rate in milliseconds	1	94	14	Simple	Time_diff	4	S	RW	100 msec	100 msec	
NUMBER_OF_ RANGES	Number of Ranges	1	105	25	Simple	Unsigned8	1	N	R	1		
RANGE_1	Primary Value Range in Primary Value Unit	1	106	26	Record	DS-61	8	N	RW			
	Beginning of range				Simple	Float	4	N	RW	0.0 uS/cm	Table 3	
	End of range				Simple	Float	4	N	RW	199900 uS/cm	Table 3	
TB82TC Specific Transducer Block Parameters												
PRIMARY_VALUE_ TYPE	Primary Value Type	1	107	27	Simple	Unsigned16	2	S	RW	113	113=Conductivity; 117=Concentration	A
PV_UPPER_LIMIT	Primary Value Upper Range Limit	1	108	28	Simple	Float	4	S	RW	199900	Table 3	
PV_UPPER_LIMIT_ UNIT	Primary Value Upper Range Limit Unit	1	109	29	Simple	Unsigned16	2	S	RW	1552	1302=mS/cm; 1342=%; 1423=ppm; 1424=ppb; 1552=uS/cm; 1997=None	
PV_LOWER_LIMIT	Primary Value Lower Range Limit	1	110	30	Simple	Float	4	S	R	0	Table 3	
PV_LOWER_LIMIT_ UNIT	Primary Value Lower Range Limit Unit	1	111	31	Simple	Unsigned16	2	S	RW	1552	1302=mS/cm; 1342=%; 1423=ppm; 1424=ppb; 1552=uS/cm; 1997=None	
PV_CAL_ZERO_ POINT	Primary Value Calibration Zero Point	1	112	32	Simple	Float	4	S	RW	0	0	
PV_CAL_SPAN_ POINT	Primary Value Calibration Span Point	1	113	33	Simple	Float	4	S	RW	100000	Table 9	
CAL_UNIT	Calibration Unit	1	114	34	Simple	Unsigned16	2	S	RW	1552	1302=mS/cm; 1342=%; 1423=ppm; 1424=ppb; 1552=uS/cm; 1997=None	
START_PV_CAL	Start Primary Value Calibration	1	115	35	Simple	Unsigned8	1	S	RW	0	1=Start zero cal; 2=Start span cal	
PV_CAL_STATUS	Primary Value Calibration Status	1	116	36	Simple	Unsigned8	1	D	R	0	1=Cal Active; 2=Unstable; 3=Drifting; 4=Success; 5=Fail	
PV_CAL_ UNSTABLE_ DRIFTING_OPTION	Accept Calibration Deviation	1	117	37	Simple	Unsigned8	1	S	RW	0	1=Accept cal; 2=Reject cal	
EXIT_REMOTE_PV_ CAL	Exit Remote Primary Value Calibration	1	118	38	Simple	Unsigned8	1	S	RW	0	0=No; 1=Yes	
SENSOR_TYPE	Sensor Type	1	119	39	Simple	Unsigned16	2	C	R	1024	102=Electromagnetic	
SENSOR_RANGE	Sensor Range	1	120	40	Record	DS-36	11	N	R	0 to 1999000 uS/cm	Table 3	
SENSOR_SN	Sensor Serial Number	1	121	41	Simple	Unsigned32	4	S	RW	0		
SENSOR_CAL_ METHOD	Sensor Calibration Method	1	122	42	Simple	Unsigned8	1	S	R	104	104=User trim standard calibration	
SENSOR_CAL_LOC	Sensor Calibration Location	1	123	43	Simple	OctetString	32	S	RW	Spaces		
SENSOR_CAL_DATE	Sensor Calibration Date	1	124	44	Simple	OctetString	16	S	RW	Spaces		
SENSOR_CAL_WHO	Person Conducting the Sensor Calibration	1	125	45	Simple	OctetString	32	S	RW	Spaces		
SECONDARY_ VALUE_1	Secondary Value 1	1	126	46	Record	DS-33	5	D	R			
	Value				Simple	Float	4	D	R			
	Status				Simple	Unsigned8	1	D	R			

Object Name	Description	Slot	Slot Index	Relative Index	Object Type	Data Type	Bytes	Store	Access	Default	Valid Range	Note
SECONDARY_ VALUE_UNIT_1	Secondary Value 1 Unit	1	127	47	Simple	Unsigned16	2	S	RW	1001	1001=°C; 1002=°F	
SECONDARY_ VALUE_2	Secondary Value 2	1	128	48	Record	DS-33	5	D	R			
	Value				Simple	Float	4	D	R			
	Status				Simple	Unsigned8	1	D	R			
SECONDARY_ VALUE_UNIT_2	Secondary Value 2 Unit	1	129	49	Simple	Unsigned16	2	N	R	1342	1302=mS/cm; 1342=%; 1423=ppm; 1424=ppb; 1552=uS/cm; 1997=None	
SECONDARY_ VALUE_3	Secondary Value 3	1	130	50	Record	DS-33	5	D	R			
	Value				Simple	Float	4	D	R			
	Status				Simple	Unsigned8	1	D	R			
SECONDARY_ VALUE_UNIT_3	Secondary Value 3 Unit	1	131	51	Simple	Unsigned16	2	N	R	1552	1302=mS/cm; 1342=%; 1423=ppm; 1424=ppb; 1552=uS/cm; 1997=None	
SOLUTION_TYPE	Canned Concentration Algorithm	1	132	52	Simple	Unsigned8	1	S	RW	4	0=NaOH; 1=NaCl; 2=HCl; 3=H_2SO_4; 4=User Defined	
TEMP_SENSOR_ TYPE	Temperature Sensor Type	1	133	53	Simple	Unsigned8	1	S	RW	0	0=Balco; 1=Pt100; 2=Pt1000; 3=None	
TEMP_COMP_TYPE	Temperature Compensation Type	1	134	54	Simple	Unsigned8	1	S	RW	0	0=Manual; 1=Automatic	
TEMP_AUTO_SOL	Automatic Solution Temperature Compensation	1	135	55	Simple	Unsigned8	1	S	RW	0	0=Standard KCl; 1=Coefficient; 2=NaOH; 3=NaCl=3; 4=HCl; 5=H_2SO_4; 6= Used Defined	
TC_COEF	Solution Coefficient Temperature Compensation	1	136	56	Simple	Float	4	S	RW	2.00	0 to 9.99 %/°C	B
USRDEF_TC_CURVE	User-Defined Temperature Compensation Curve Values	1	137	57	Array	Float	48	S	RW	T, K/K_{STD} 0, 1.80 25, 1.00 50, 0.69 75, 0.50 100, 0.38 156, 0.25	T (Temperature in degree C): 0 to 999 degree C, monotonically increasing. K/K_{STD} (Conductivity ratio): 0 to 19.99	C
VAR_REF_TEMP	Temperature Compensation Reference Temperature Value	1	138	58	Simple	Float	4	S	RW	25 °C	-20 to 200 °C	
USRDEF_CONC_ CURVE_NAME	User-Defined Concentration Text String	1	139	59	Simple	OctetString	6	S	RW	"AAAAAA"		D
USREDF_CONC_ UNIT	User-Defined Concentration Engineering Unit	1	140	60	Simple	Unsigned16	2	S	RW	1342	1342=%; 1423=ppm; 1424=ppb; 1997=None	D
USRDEF_CONC_ CURVE	User-Defined Concentration Curve Values	1	141	61	Array	Float	48	S	RW	Cond., Conc. 0, 0.0 40000.0, 4.0 80000.0, 8.0 120000.0, 12.0 160000.0, 16.0 199900, 19.99	Conductivity in uS/cm: Conductivity range in Table 3. Concentration in USRDEF_CONC_UNIT: User defined concentration range in Table 3.	D
CONCENTRATION_ RANGE	Concentration Range	1	142	62	Simple	Unsigned8	1	S	RW	1	0=0-1999; 1=0-199.9; 2=0-19.99; 3=0-1.999	D
MANUAL_TEMP_ SETPOINT	Manual Temperature Compensation Setpoint	1	143	63	Simple	Float	4	S	RW	25 °C	-20 to 300 °C	E
MANUAL_TEMP_ SETPOINT_UNIT	Manual Temperature Compensation Setpoint Unit	1	144	64	Simple	Unsigned16	2	S	RW	1001	1001=Deg. C; 1002=Deg. F	
TEMP_CAL-POINT	Temperature Calibration Point	1	145	65	Simple	Float	4	S	RW	25 °C	0 to 200 °C	E
TEMP_CAL_UNIT	Temperature Calibration Point Unit	1	146	66	Simple	Unsigned16	2	S	RW	1001	1001=Deg. C; 1002=Deg. F	
PV_CAL_SLOPE	Process Variable Calibration Slope Value	1	147	67	Simple	Float	4	S	RW	100	20 to 500	
PV_CAL_SLOPE_ UNIT	Process Variable Calibration Slope Unit	1	148	68	Simple	Unsigned16	2	N	R	1342	1342=%	
PV_CAL_OFFSET	Process Variable Calibration Offset Value	1	149	69	Simple	Float	4	S	RW	0 uS/cm	-100000.0 to +100000.0 uS/cm	
PV_CAL_OFFSET_ UNIT	Process Variable Calibration Offset Unit	1	150	70	Simple	Unsigned16	2	N	R	1552	1302=mS/cm; 1342=%; 1423=ppm; 1424=ppb; 1552=uS/cm; 1997=None	
PV_CAL_RESET	Process Variable Reset	1	151	71	Simple	Unsigned8	1	S	RW	0	0=No; 1=Yes	
TEMP_CAL_SLOPE	Temperature Calibration Slope Value	1	152	72	Simple	Float	4	S	RW	100%	20 to 150%	
TEMP_CAL_SLOPE_ UNIT	Temperature Calibration Slope Unit	1	153	73	Simple	Unsigned16	2	N	R	%	1342=%	
TEMP_CAL_OFFSET	Temperature Calibration Offset Value	1	154	74	Simple	Float	4	S	RW	0 °C	-40 to +40 °C	
TEMP_CAL_ OFFSET_UNIT	Temperature Calibration Offset Unit	1	155	75	Simple	Unsigned16	2	N	RW	1001	1001=Deg. C; 1002=Deg. F	
TEMP_CAL_RESET	Temperature Calibration Reset	1	156	76	Simple	Unsigned8	1	S	RW	0	0=No; 1=Yes	
EXTENDED_STATUS	Extended Status	1	157	77	Array	Unsigned8	9	N	R			
VIEW_1	View 1	1	158	78	View_1	OctetString	26	N	R			J

The Analog Input (AI) Function Blocks are used to publish Primary and Secondary Variable data onto the fieldbus segment. AI1 is fixed to the Primary Variable; however, AI2 can be mapped to any one of the four variables. These include and are limited to the primary process variable (i.e., conductivity or concentration depending on PRIMARY_VALUE_TYPE) or any one of the secondary process variables (i.e., temperature, conductivity or concentration, or uncompensated conductivity).

The following diagram illustrates the Analog Input One Function Block design.

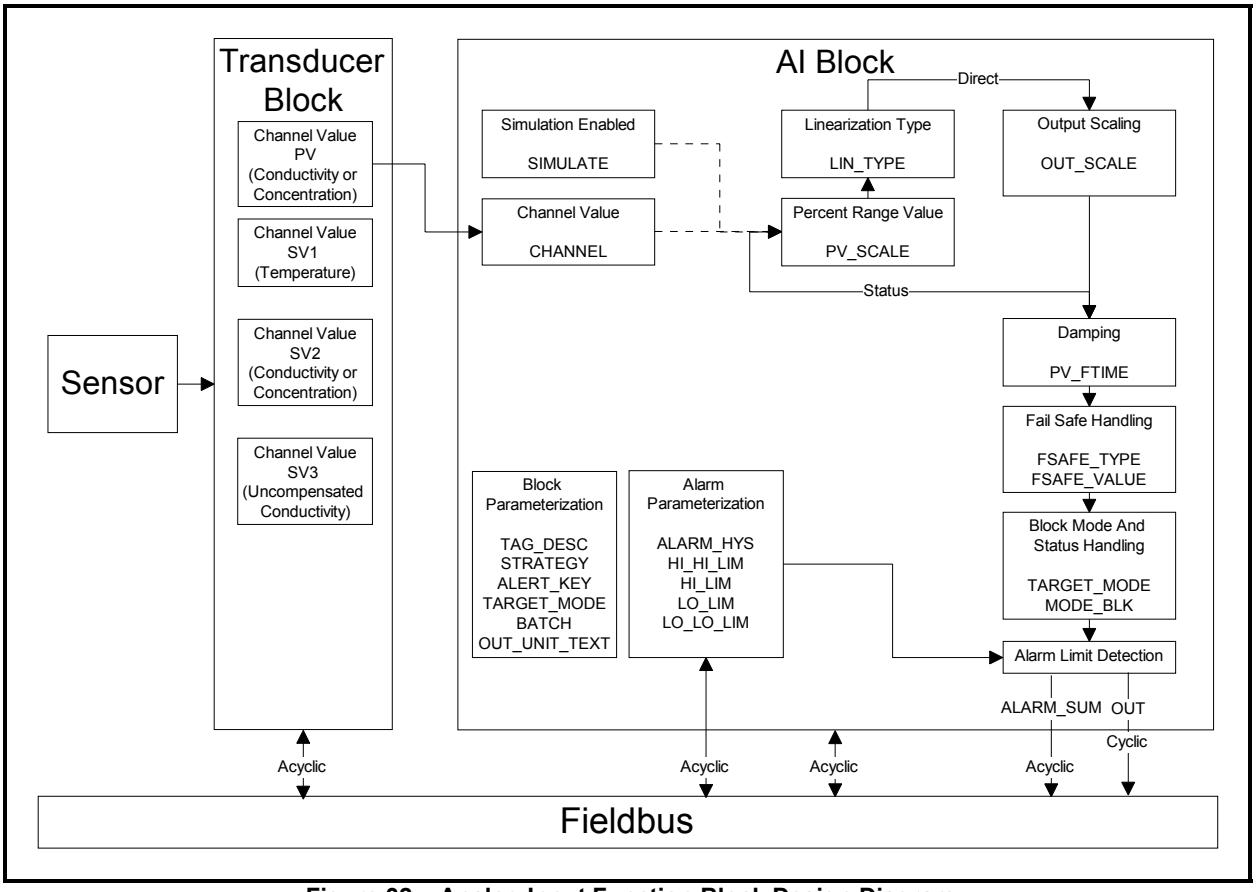

Figure 32 – Analog Input Function Block Design Diagram

The following table lists the Analog Input One Function Block parameter information.

ANALOG INPUT 1 - FUNCTION BLOCK

Object Name	Description	Slot	Slot Index	Relative Index	Object Type	Data Type	Bytes	Store	Access	Default	Valid Range	Note
Standard Parameters												
BLK_DATA	Block Data	1	16	0	Record	DS-32	20	C	R			
ST_REV	Static Revision	1	17	1	Simple	Unsigned16	2	N	R			
TAG_DESC	Tag Description	1	18	2	Simple	OctetString	32	S	RW	Spaces		
STRATEGY	Strategy	1	19	3	Simple	Unsigned16	2	S	RW	0		
ALERT_KEY	Alert Key	1	20	4	Simple	Unsigned8	1	S	RW	0		
TARGET_MODE	Target Mode	1	21	5	Simple	Unsigned8	1	S	RW	8	128 =OOS, 16=MAN, 8=AUTO	
MODE_BLK	Block Mode	1	22	6	Record	DS-37	3	D	R			
	Actual				Simple	Unsigned8	1	D	R			
	Permitted				Simple	Unsigned8	1	D	R	128 (OOS) 16 (MAN) 8 (AUTO)		
	Normal				Simple	Unsigned8	1	D	R	8=AUTO		
ALARM_SUM	Alarm Summary	1	23	7	Record	DS-42	8	D	R			
	Current				Simple	OctetString	2	D	R			M
	Unreported				Simple	OctetString	2	D	R			N
	Unacknowledged				Simple	OctetString	2	D	R			N
	Disabled				Simple	OctetString	2	D	R			N
BATCH	Batch	1	24	8	Record	DS-67	10	S	RW			
Standard Analog Input Block Parameters												
OUT	Output	1	26	10	Record	DS-33	5	D	RW			F
PV_SCALE	Process Variable Scale	1	27	11	Array	Float	8	S	RW			
	High Range				Simple	Float	4	N	RW	1999000 uS/cm	Table 3	GI-2
	Low Range				Simple	Float	4	N	RW	0 uS/cm	Table 3	G-2
OUT_SCALE	Output Scale	1	28	12	Record	DS-36	11	S	RW			
	High Range				Simple	Float	4	S	RW	1999000 uS/cm		G-1 G-2
	Low Range				Simple	Float	4	S	RW	0 uS/cm		G-1 G-2
	Units				Simple	Float	2	S	RW	uS/cm	Table 7	
	Decimal Point				Simple	Interger8	1	S	RW	2		
LIN_TYPE	Linearity Type	1	29	13	Simple	Unsigned8	1	S	RW	0	0 = Linear	
CHANNEL	Channel	1	30	14	Simple	Unsigned16	2	S	RW	265	265 = PV Channel	
PV_FTIME	Process Variable Filter Time Constant	1	32	16	Simple	Float	4	S	RW	0	0 to 32 Seconds	
FSAFE_TYPE	Fail Safe Reaction Type	1	33	17	Simple	Unsigned8	1	S	RW	1	Table 6	
FSAFE_VALUE	Fail Safe Output Value	1	34	18	Simple	Float	4	S	RW	0		
ALARM_HYS	Alarm Hysteresis	1	35	19	Simple	Float	4	S	RW	0		
HI_HI_LIM	High-High Alarm Limit	1	37	21	Simple	Float	4	S	RW	1999000 uS/cm		H-1
HI_LIM	High Alarm Limit	1	39	23	Simple	Float	4	S	RW	1999000 uS/cm		H-1
LO_LIM	Low Alarm Limit	1	41	25	Simple	Float	4	S	RW	0 uS/cm		H-1
LO_LO_LIM	Low-Low Alarm Limit	1	43	27	Simple	Float	4	S	RW	0 uS/cm		H-1
HI_HI_ALM	High-High Alarm State	1	46	30	Record	DS-39	16	D	R			
HI_ALM	High Alarm State	1	47	31	Record	DS-39	16	D	R			
LO_ALM	Low Alarm State	1	48	32	Record	DS-39	16	D	R			
LO_LO_ALM	Low-Low Alarm State	1	49	33	Record	DS-39	16	D	R			
SIMULATE	Simulate	1	50	34	Record	DS-50	6	S	RW			
	Simulate Status					Unsigned8	1	S	RW	0x80		
	Simulate Value					Float	4	S	RW	0		
	Simulate Enable/Disable					Unsigned8	1	S	RW	0	0 = Disabled Not 0 = Enabled	
OUT_UNIT_TEXT	Output Unit Text	1	51	35	Simple	OctetString	16	S	RW	Spaces		

Object Name	Description	Slot	Slot Index	Relative Index	Object Type	Data Type	Bytes	Store	Access	Default	Valid Range	Note
TB82TC Specific Analog Input Block Parameters												
TREND_VAR	AI OUT Trend	1	61	45	Record	Device Specific	97	S	RW			
	Block Index					Unsigned16	2	S	RW	3	3 = AI1 Block	
	Parameter relative index					Unsigned16	2	S	RW	26	26 = AI OUT parameter	
	Sample type					Unsigned8	1	S	RW	0	0=Not initialized (Trend Disabled) 1=Instantaneous value	
	Sample interval (in milliseconds)					Float	4	S	RW	0		
	Last update (time of last trend value update relative to device startup)					DS-21	8	D	R			
	Sample value 1 to 16 (Sample value 1 = value of latest sample, sample value 16 = value of oldest sample)					Float	4x16	D	R			
	Sample status 1 to 16 (Sample status 1 = status of latest sample, sample status 16 = status of oldest sample)					Unsigned8	1x16	D	R			
VIEW_1	View 1	1	62	46	View_1	OctetString	18	N	R			K

The following diagram illustrates the Analog Input Two Function Block design.

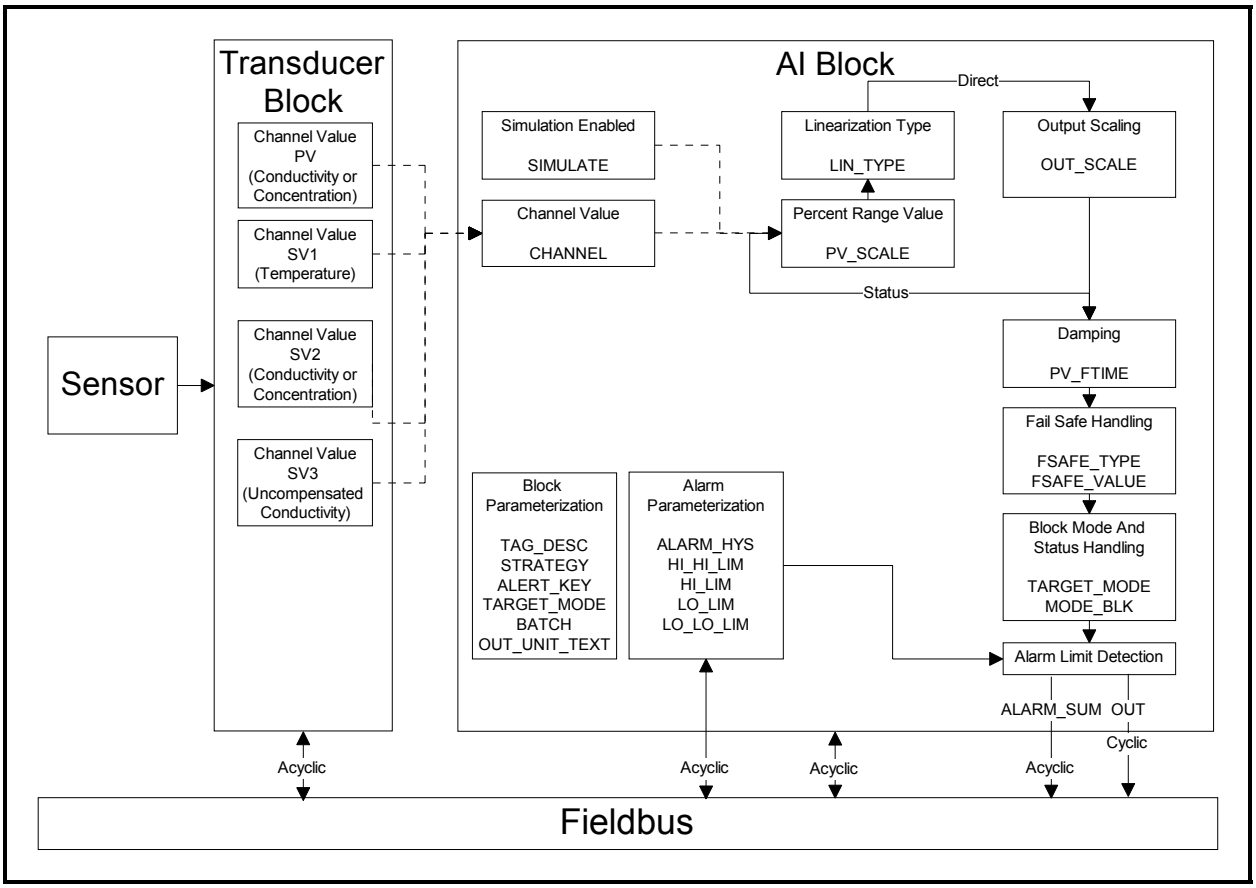

Figure 33 – Analog Input Two Function Block Design Diagram

The following table lists the Analog Input Two Function Block parameter information.

ANALOG INPUT 2 - FUNCTION BLOCK

Object Name	Description	Slot	Slot Index	Relative Index	Object Type	Data Type	Bytes	Store	Access	Default	Valid Range	Note
Standard Parameters												
BLK_DATA	Block Data	2	16	0	Record	DS-32	20	C	R			
ST_REV	Static Revision	2	17	1	Simple	Unsigned16	2	N	R			
TAG_DESC	Tag Description	2	18	2	Simple	OctetString	32	S	RW	Spaces		
STRATEGY	Strategy	2	19	3	Simple	Unsigned16	2	S	RW	0		
ALERT_KEY	Alert Key	2	20	4	Simple	Unsigned8	1	S	RW	0		
TARGET_MODE	Target Mode	2	21	5	Simple	Unsigned8	1	S	RW	8	128=OOS; 16=MAN; 8 =AUTO	
MODE_BLK	Actual Block Mode	2	22	6	Record	DS-37	3	D	R			
	Actual				Simple	Unsigned8	1	D	R			
	Permitted				Simple	Unsigned8	1	D	R	128 (OOS) 16 (MAN) 8 (AUTO)		
	Normal				Simple	Unsigned8	1	D	R	8=AUTO		
ALARM_SUM	Alarm Summary	2	23	7	Record	DS-42	8	D	R			
	Current				Simple	OctetString	2	D	R			M
	Unreported				Simple	OctetString	2	D	R			N
	Unacknowledged				Simple	OctetString	2	D	R			N
	Disabled				Simple	OctetString	2	D	R			N
BATCH	Batch	2	24	8	Record	DS-67	10	S	RW	0		
Standard Analog Input Block Parameters												
OUT	Output	2	26	10	Record	DS-33	5	D	RW			F
PV_SCALE	Process Variable Scale	2	27	11	Array	Float	8	S	RW			
	High Range				Simple	Float	4	N	RW	300 °C	Table 3	G-2 to G-5
	Low Range				Simple	Float	4	N	RW	-20 °C	Table 3	G-2 to G-5
OUT_SCALE	Output Scale	2	28	12	Record	DS-36	11	S	RW			
	High Range				Simple	Float	4	S	RW	300 °C		G
	Low Range				Simple	Float	4	S	RW	-20 °C		G
	Units				Simple	Unsigned16	2	S	RW	°C	Table 7	
	Decimal Point				Simple	Interger8	1	S	RW	2		
LIN_TYPE	Linearity Type	2	29	13	Simple	Unsigned8	1	S	RW			
CHANNEL	Channel	2	30	14	Simple	Unsigned16	2	S	RW	298	265=PV, 302=Temp (SV1); 304=Conductivity or Concentration (SV2); 306=Uncompensated Conductivity (SV3)	
PV_FTIME	Process Variable Filter Time Constant	2	32	16	Simple	Float	4	S	RW	0	0 to 32 Seconds	
FSAFE_TYPE	Fail Safe Reaction Type	2	33	17	Simple	Unsigned8	1	S	RW	1	Table 6	
FSAFE_VALUE	Fail Safe Output Value	2	34	18	Simple	Float	4	S	RW	0		
ALARM_HYS	Alarm Hysteresis	2	35	19	Simple	Float	4	S	RW	0		
HI_HI_LIM	High-High Alarm Limit	2	37	21	Simple	Float	4	S	RW	300 °C		H
HI_LIM	High Alarm Limit	2	39	23	Simple	Float	4	S	RW	300 °C		H
LO_LIM	Low Alarm Limit	2	41	25	Simple	Float	4	S	RW	-20 °C		H
LO_LO_LIM	Low-Low Alarm Limit	2	43	27	Simple	Float	4	S	RW	-20 °C		H
HI_HI_ALM	High-High Alarm State	2	46	30	Record	DS-39	16	D	R			
HI_ALM	High Alarm State	2	47	31	Record	DS-39	16	D	R			
LO_ALM	Low Alarm State	2	48	32	Record	DS-39	16	D	R			
LO_LO_ALM	Low-Low Alarm State	2	49	33	Record	DS-39	16	D	R			
SIMULATE	Simulate	2	50	34	Record	DS-50	6	S	RW			
	Simulate Status					Unsigned8	1	S	RW	0X80		
	Simulate Value					Float	4	S	RW	0		
	Simulate Enable/Disable					Unsigned8	1	S	RW	0	0 = Disabled Not 0 = Enabled	
OUT_UNIT_TEXT	Output Unit Text	2	51	35	Simple	OctetString	16	S	RW	Spaces		

Object Name	Description	Slot	Slot Index	Relative Index	Object Type	Data Type	Bytes	Store	Access	Default	Valid Range	Note
TB82TC Specific Analog Input Block Parameters												
TREND_VAR	AI OUT Trend	2	61	45	Record	Device Specifc	97					
	Block Index					Unsigned16	2	S	RW	3	4 = AI2 Block	
	Parameter relative index					Unsigned16	2	S	RW	26	26 = AI OUT parameter	
	Sample type					Unsigned8	1	S	RW	0	0=Not initialized (Trend Disabled) 1=Instantaneous value	
	Sample interval (in milliseconds)					Float	4	S	RW	0		
	Last update (time of last trend value update relative to device startup)					DS-21	8	D	R			
	Sample value 1 to 16 (Sample value 1 = value of latest sample, sample value 16 = value of oldest sample)					Float	4x16	D	R			
	Sample status 1 to 16 (Sample status 1 = status of latest sample, sample status 16 = status of oldest sample)					Unsigned8	1x16	D	R			
VIEW_1	View 1	2	62	46	View_1	OctetString	18	N	R			K

Note.

A) PRIMARY_VALUE_TYPE parameter establishes the type of measurement the device is performing. The default measurement type is Conductivity. When writing to this parameter (i.e., switching the device measurement type to Concentration), the AI Block linked to PV channel should be kept in OOS mode until all the necessary TB and AI variables are properly configured. If not, a modification to PRIMARY_VALUE_TYPE automatically switches the AI block mode to OOS. PV is the only available input for AI1. The PV_UNIT object determines the PV Engineering Unit.

B) TC_COEF parameter is only valid when TEMP_COMP_TYPE is set to Auto and TC Coefficient is selected for TEMP_AUTO_SOL.

C) USRDEF_TC_CURVE parameters are only valid when TEMP_COMP_TYPE is set to Auto and User Defined is selected for TEMP_AUTO_SOL. Default values are in degrees Celsius and conductivity ratios.

D) USERDEF_CONC_CURVE_NAME, USRDEF_CONC_UNIT, USRDEF_CONC_CURVE and CONCENTRATION_RANGE parameters are only valid when SOLUTION_TYPE is set to User Defined. Default values are in µS/cm and percent concentration.

E) MANUAL_TEMP_SETPOINT or TEMP_CAL_POINT parameters are used to set the temperature value for Manual Temperature Compensation (i.e., when TEMP_COMP_TYPE is set to MANUAL).

F) AI OUT variable can only be written when the AI is set to the Manual Mode.

G) AI OUT_SCALE parameters:
   1) The OUT_SCALE parameters of the AI use the values established by the PV_SCALE.
   2) When the AI channel is set to the PV (Primary Variable), the OUT_SCALE and PV_SCALE parameters of AI1 are set to the corresponding TB_RANGE_1.
   3) When the AI2 channel is set to the SECONDARY_VALUE_1 (Temperature), the OUT_SCALE and PV_SCALE parameters of the AI are set to the default measurement temperature limits of -20 to 300°C (-4 to 572°F).
   4) When the AI2 channel is set to the SECONDARY_VALUE_2, the OUT_SCALE and PV_SCALE parameters are dependent on the PRIMARY_VALUE_TYPE in the TB (Concentration when PRIMARY_VALUE_TYPE = Conductivity or Conductivity when PRIMARY_VALUE_TYPE = Concentration).
   5) When the AI channel is set to the SECONDARY_VALUE_3 (Uncompensated Conductivity), the OUT_SCALE and PV_SCALE parameters of the AI are set to the default measurement limits of 0 to ten times the maximum conductivity range.

H) AI HI_HI_LIM, HI_LIM, LO_LO_LIM, and LO_LIM parameters:
   1) For AI1, the alarm limits are set to TB_RANGE_1.
   2) When the AI2 channel is set to the SECONDARY_VALUE_1 (Temperature), the limits are set to the default measurement temperature limits of -20 to 300°C (-4 to 572 °F).
   3) When the AI2 channel is set to the SECONDARY_VALUE_2, the limits are set to the default limits determined by the Conductivity/Concentration sensor range.
   4) When the AI2 channel is set to the SECONDARY_VALUE_3, the limits are set to the default limits determined by the conductivity range.

I) Physical Block View_1 is comprised of ST_REV, MODE_BLK, ALARM_SUM, DIAGNOSIS, DEVICE_STATE and GLOBAL_STATUS objects.

J) Transducer Block View_1 is comprised of ST_REV, MODE_BLK, ALARM_SUM, PV and ACTIVE_RANGE objects.

K) Analog Input Block View_1 is comprised of ST_REV, MODE_BLK, ALARM_SUM and OUT objects.

L) If the DEVICE_STATE is set to Maintenance by the user, the Transducer Block PV and SV status and Analog Input Block OUT status are marked as “Good-Maintenance required”, provided the previous status was “Good”.

M) Alarm Summary - Current Octet 0: bit 0 = not used; bit 1 = HI_HI_Alarm; bit 2 = HI_Alarm; bit 3 = LO_LO_Alarm; bit 4 = LO_Alarm; bit 7 = Update Event.

N) Alarm Summary – Unreported, Unacknowledged and Disabled are for future use.

TABLE 1

PRIMARY_VALUE_TYPE Codes

113 Conductivity
117 Concentration

TABLE 2

Engineering unit codes related to PRIMARY_VALUE_TYPE

1302 mS/cm for PRIMARY_VALUE_TYPE = 113 (Conductivity)
1552 µS/cm for PRIMARY_VALUE_TYPE = 113 (Conductivity)
1342 % for PRIMARY_VALUE_TYPE = 117 (Concentration)
1423 ppm for PRIMARY_VALUE_TYPE = 117 (Concentration)
1424 ppb for PRIMARY_VALUE_TYPE = 117 (Concentration)
1997 no units for PRIMARY_VALUE_TYPE = 117 (Concentration)

TABLE 3

Valid ranges for PRIMARY_VALUE_TYPE

PRIMARY_VALUE_TYPE 113:
0 to 1999000 µS/cm

PRIMARY_VALUE_TYPE 117:
For SOLUTION = Pre-defined:
0 to 15% NaOH Solution
0 to 20% NaCl Solution
0 to 18% HCl Solution
0 to 20% H2SO4 Solution

For SOLUTION = User Defined:
0 to 1999 units (Concentration Range 0)
0 to 199.9 units (Concentration Range 1)
0 to 19.99 units (Concentration Range 2)
0 to 1.999 units (Concentration Range 3)

TABLE 4

Temperature Unit Codes

1001 Degrees Celsius
1002 Degrees Fahrenheit

TABLE 5

LCD Secondary display options

0 Temperature in degree Celsius (Secondary variable 1)
1 Temperature in degree Fahrenheit (Secondary variable 1)
2 Sensor Type
3 Conductivity (available when PRIMARY_VALUE_TYPE = Concentration)
4 Custom Concentration Display (available when PRIMARY_VALUE_TYPE = Concentration)
5 Uncompensated Conductivity
6 Software Revision

TABLE 6

FSAFE_TYPE options

1 FSAFE_VALUE is used as OUT value (Status = Uncertain + Substitute value).
2 Use of stored last valid OUT value (Status = Uncertain + Last usable value; If there is no valid value available, Status = Uncertain + Initial value).
3 OUT has the wrong calculated value (Status = Bad + any actual sub-status).

TABLE 7

AIFB Engineering unit codes

AI CHANNEL = PRIMARY_VALUE (Channel 1)
1302 mS/cm for PRIMARY_VALUE_TYPE = 113 (Conductivity)
1552 µS/cm for PRIMARY_VALUE_TYPE = 113 (Conductivity)
1342 % for PRIMARY_VALUE_TYPE = 117 (Concentration)
1423 ppm for PRIMARY_VALUE_TYPE = 117 (Concentration)
1424 ppb for PRIMARY_VALUE_TYPE = 117 (Concentration)
1997 no units for PRIMARY_VALUE_TYPE = 117 (Concentration)

AI CHANNEL = Temperature (Channel 2; SECONDARY_VALUE_1)
1001 Degree Celsius
1002 Degree Fahrenheit

AI CHANNEL = Conductivity/Concentration (Channel 3; SECONDARY_VALUE_2)
1302 mS/cm when SECONDARY_VALUE_2 = Conductivity; PRIMARY_VALUE_TYPE = Concentration
1552 µS/cm when SECONDARY_VALUE_2 = Conductivity; PRIMARY_VALUE_TYPE = Concentration
1342 % when SECONDARY_VALUE_2 = Concentration; PRIMARY_VALUE_TYPE = Conductivity
1423 ppm when SECONDARY_VALUE_2 = Concentration; PRIMARY_VALUE_TYPE = Conductivity
1424 ppb when SECONDARY_VALUE_2 = Concentration; PRIMARY_VALUE_TYPE = Conductivity
1997 no units when SECONDARY_VALUE_2 = Concentration; PRIMARY_VALUE_TYPE = Conductivity

AI CHANNEL = Uncompensated Conductivity (Channel 4; SECONDARY_VALUE_3)
1303 mS/cm
1552 µS/cm

TABLE 8

Uncompensated Conductivity (SECONDARY_VALUE_3) ranges

0 to 199900 µS/cm

TABLE 9

Valid ranges for PV_CAL_SPAN_POINT

PRIMARY_VALUE_TYPE 113:
100 to 1999000 µS/cm

PRIMARY_VALUE_TYPE 117:
Lower limit = Concentration value equivalent of 100 uS/cm conductivity.
Upper limit =

For SOLUTION = Pre-defined:
15% NaOH Solution
20% NaCl Solution
18% HCl Solution
20% H2SO4 Solution

For SOLUTION = User Defined:
1999 units (Concentration Range 0)
199.9 units (Concentration Range 1)
19.99 units (Concentration Range 2)
1.999 units (Concentration Range 3)

The following figure shows the possible connections that can be made between the Transducer Block outputs and the two AI's.

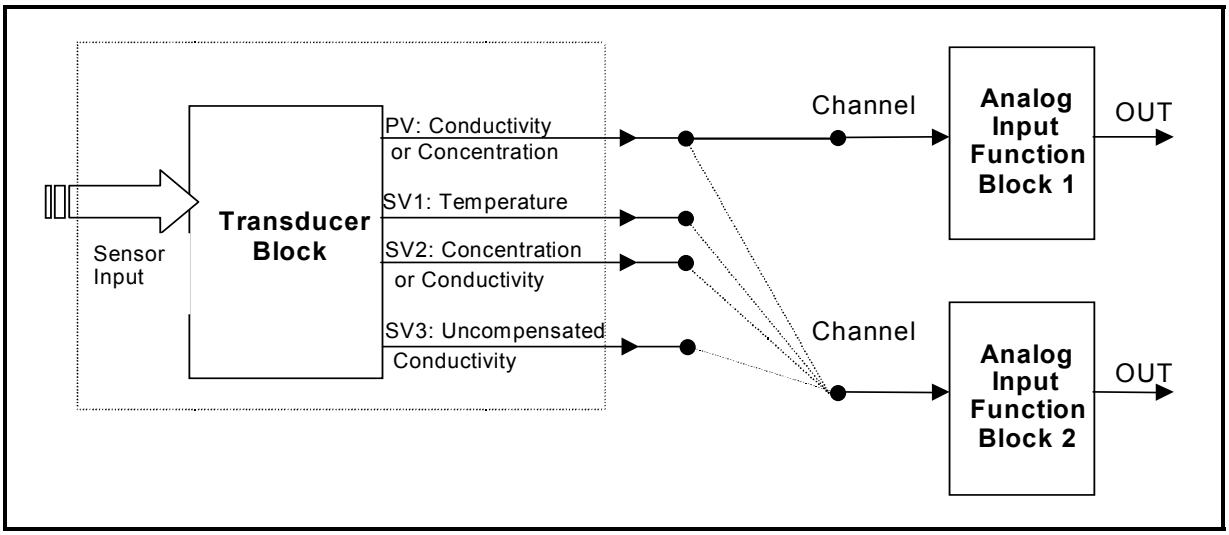

Figure 34 - Possible Connections Between the TB and AI's

The table below gives a summary of the relation between the selected measurement and available variables that can be used as an input for the Analog Input Function Blocks.

	TYPE OF MEASURE (TB_PRIMARY_VALUE_TYPE)	
	Conductivity	**Concentration**
Channel 1 (AI1 and AI2) (TB PV)	Conductivity Value	Concentration Value
Channel 2 (AI2 Only) (TB SECONDARY_VALUE_1)	Temperature	Temperature
Channel 3 (AI2 Only) (TB SECONDARY_VALUE_2)	Concentration Value	Conductivity Value
Channel 4 (AI2 Only) (TB SECONDARY_VALUE_3)	Uncompensated Conductivity	Uncompensated Conductivity

Cyclical Configuration Data

For maximum configuration (i.e., both AI blocks are in use), the cyclic data structure of TB82 Profibus PA devices would be:

Data index	Data	Access	Data format
0,1,2,3	AI1 OUT value	Read	32-bit floating point number (IEEE-754) in the configured AI1 block OUT_SCALE units.
4	AI1 OUT status	Read	Standard Profibus PA status
5,6,7,8	AI2 OUT value	Read	32-bit floating point number (IEEE-754) in the configured AI2 block OUT_SCALE units.
9	AI2 OUT status	Read	Standard Profibus PA status

The AI1 and AI2 OUT value is selected using the respective AI block CHANNEL parameter.

TB82 PA configuration data includes:

Cyclic data block	Sequence in Chk_Cfg	Configuration for Data block active (h=hexadecimal number)	Configuration for Data block inactive (h=hexadecimal number)
AI1 OUT parameter	1	42h, 84h, 81h, 81h	00h
AI2 OUT parameter	2	42h, 84h, 81h, 81h	00h

Possible combinations of configuration would be:

Activated data blocks	Configuration data string (Chk_Cfg)	Length of configuration
AI1 OUT value and status + AI2 OUT value and status	42h, 84h, 81h, 81h, 42h, 84h, 81h, 81h	8 bytes
AI1 OUT value and status	42h, 84h, 81h, 81h, (00h)[1]	4 or 5 bytes
AI2 OUT value and status	00h[1], 42h, 84h, 81h, 81h	5 bytes

The above combinations are included in the GSD file and DTM.

[1] A zero as a placeholder in the configuration string should identify data blocks that are not activated. Zeroes at the end of the configuration string are optional and can be omitted.

HARDWARE DIP SWITCH FUNCTIONS

There are four switches on the Microprocessor/Display PCB Assembly that perform unique transmitter functions. The figure below shows the location and function of these switches.

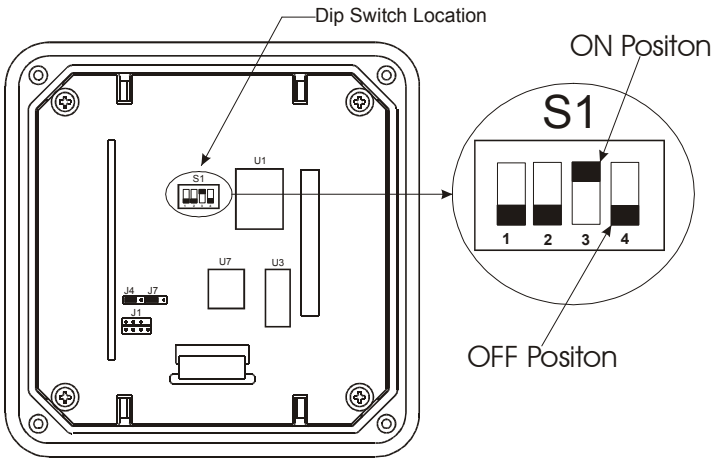

SW1	ON = Write Lock
	OFF = Write Unlock
SW2	Not Used
	Not Used
SW3	ON = Cold Start
	OFF = Normal
SW4	Not Used
	Not Used

Microprocessor/Display PCB assembly shown mounted onto Front Bezel without Input and Power Supply PCB assemblies installed.

Figure 35 – Hardware Dip Switch Location and Function

Switch number 1 is the Write Lock. When this switch is in the ON position and the HD_WRITE_PROTECTION is enabled in the Physical Block, the transmitter prevents any modification of data or parameters that can be performed both locally and from a class 1 or 2 MASTER device.

Switch number 2 is not used and has been reserved for future use.

Switch number 3 is used for Cold Startup. When this switch is in the ON position before powering up the transmitter, most transmitter parameters are set to default values (See Device Blocks for default settings). These default parameters are found in all support blocks.

Switch number 4 is not used and has been reserved for future use.

Note.
A Cold Startup will adjust several parameters to a defined default value. Cold Startup may be used to reset the initial operating condition of the transmitter. When the Cold Start switch is in the ON position on transmitter power up, critical transmitter parameters will be reset to default values. The SW3 switch must be in the OFF position to ensure user configured data is not overwritten on transmitter power up.

SIMPLE FAULT FINDING

If the transmitter does not appear to be working satisfactory, carry out the following troubleshooting checks before contacting your nearest Service Center or Factory Representative.

If the instrument is to be returned for repair, ensure that it is adequately packed using the original packing material and box or using high-density chip foam. **The Return Materials Authorization (RMA) number must be sent with the instrument. Equipment returned to ABB Inc. with incorrect or incomplete information may result in significant delays or non-acceptance of the shipment.** At the time the RMA number is given, an estimate of the repair costs will be provided, and a customer purchase order will be requested. **The RMA and purchase order numbers must be clearly marked on all paperwork and on the outside of the return package container (i.e., packing box).**

Equipment needed:
PROFIBUS configuration software or communication Host/System

High, Low or Irregular Process Variables

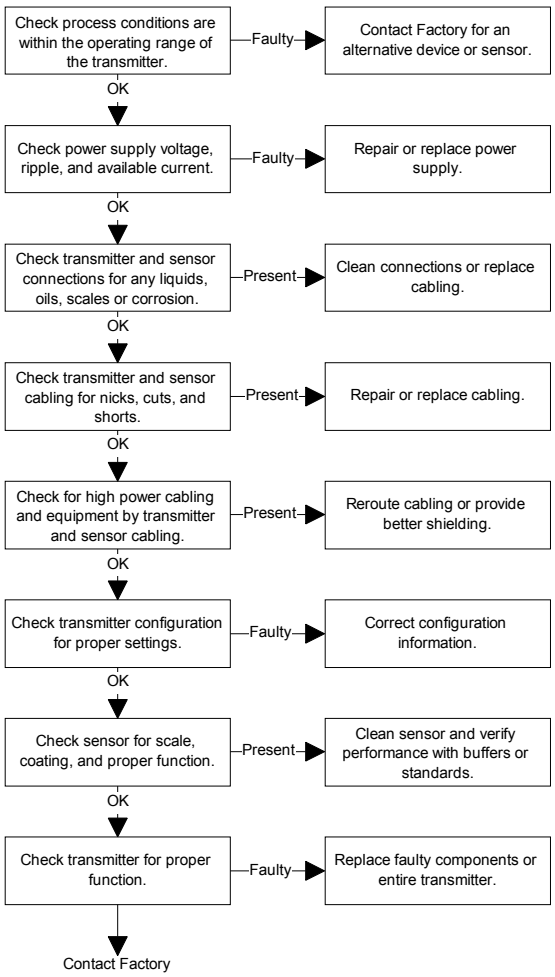

No Output

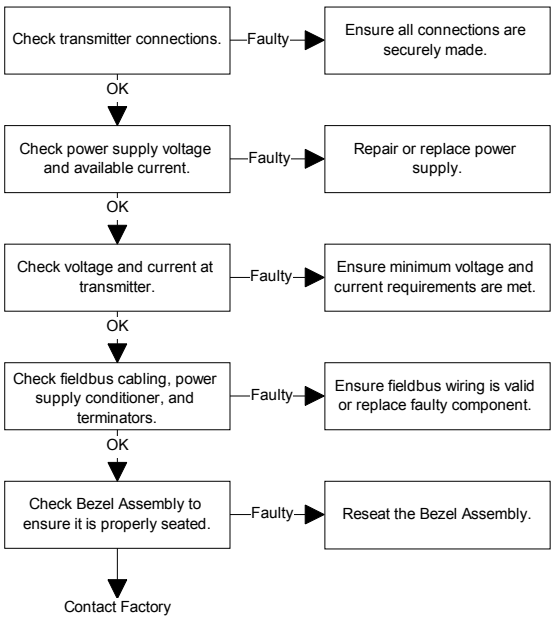

Since the transmitter has an integral display, diagnostic codes are shown in the secondary display region when interrogated using the FAULT Info key. In addition, the transmitter status is available through most configuration or system/host tools.

DIAGNOSTIC INFORMATION

The TB82TC Profibus PA transmitter performs a number of diagnostic checks on hardware, software, and sensor functions. If a nonconforming condition is detected, the user is alerted to faults locally by a flashing FAULT indicating icon and remotely by a configuration and/or system/host tool.

When using the local HMI, diagnostic faults are interrogated using the FAULT Info key while the transmitter is in the Measure Mode. A short text string and fault code is alternately shown in the secondary display region. If multiple faults exist, the FAULT Info key moves the user to the next fault. Once all faults have been interrogated, the transmitter returns to the Measure Mode. A flashing FAULT icon indicates a new fault condition that has not been interrogated. Conversely, a non-flashing FAULT icon indicates all fault conditions have been interrogated but not resolved. When all fault conditions are resolved, the FAULT icon and FAULT Info key are de-energized.

Fault conditions are grouped into two categories based on severity. Conditions that result in degradation of transmitter performance are reported as Problem Codes (PC), while conditions that render the transmitter inoperable are reported as Error Codes (EC). Fault codes are reported in the secondary display region in a first in, first out order (i.e., the first detected fault condition is the first condition that is displayed upon interrogation). The table below lists all applicable Error and Problem codes and the suggested Corrective Actions. See Text Prompt Definitions for fault code description.

Fault Code	Fault Text String	Corrective Action
EC1	PV.AD	Contact Factory.
EC3	PH.PCB	Incorrect Input PCB assembly has been detected. pH/ORP/pION Input PCB Assembly is being used with TB82TC product firmware.
EC6	TE.PCB	Incorrect Input PCB assembly has been detected. Two-Electrode Conductivity Input PCB Assembly is being used with TB82TC product firmware.
EC7	EC.PCB	Incorrect Input PCB assembly has been detected. Four-Electrode Conductivity Input PCB Assembly is being used with TB82TC product firmware.
PC8	HI.PV	1) Verify process conditions are within transmitter range values. 2) Verify sensor wiring is properly connected. 3) Verify sensor wiring is free of nicks, cuts, breaks and/or open connections. 4) Verify configuration settings are correct. 5) Verify manual or measured temperature value is correct. If a temperature sensor is not being used, verify that TMP.SNS is set to none in the transmitter configuration.
PC9	LO.PV	See PC8 corrective actions.
PC10	HI.TEMP	See PC8 corrective actions.
PC11	LO.TEMP	See PC8 corrective actions.
PC12	TEMP.AD	See PC8 corrective actions. If all items check out properly, replace Input PCB Assembly. Transmitter can be used; however, the Temperature Compensation must be set to Manual and a Temperature Calibration should be conducted in order to set the Manual Temperature Value close to the operating conditions.
PC20	BAD.SEE	Contact Factory.
PC21	NO.F.CAL	
PC30	R0.F.CAL	
PC31	R1.F.CAL	
PC32	R2.F.CAL	
PC33	R3.F.CAL	
PC34	R4.F.CAL	
PC40	W0.F.CAL	
PC41	W1.F.CAL	
PC42	W2.F.CAL	
PC43	W3.F.CAL	
PC44	W4.F.CAL	
PC45	BA.F.CAL	
PC46	PT.F.CAL	
PC48	PK.F.CAL	
PC50	R0.CHKS	
PC51	R1. CHKS	
PC52	R2. CHKS	

Fault Code	Fault Text String	Corrective Action
PC53	R3. CHKS	
PC54	R4. CHKS	
PC60	W0. CHKS	
PC61	W1. CHKS	
PC62	W2. CHKS	
PC63	W3. CHKS	
PC64	W4. CHKS	
PC65	BA.CHKS	
PC66	PT.CHKS	
PC68	PK.CHKS	

Calibration Diagnostic Messages

During a calibration, the TB82TC transmitter monitors the quality and value of the process variable signal. Poor signals will generate one of three types of warnings: BAD.CAL (i.e., Bad Calibration Value), UNSTBL (i.e., Unstable Calibration Value), or DRIFT (i.e., Drifting Calibration Value). A BAD.CAL condition occurs when the analyzer cannot lock onto a valid signal such as a PV Over or Under Range Error. A BAD.CAL condition rejects the calibration value. Unstable or drift conditions are also undesirable; however, for these occurrences the user has the option to accept the calibration after viewing the calibration slope and offset data.

The transmitter performs slope and offset calculations relative to a theoretically perfect conductivity and/or temperature sensor during each calibration cycle. Calibration history is retained for future interrogation using the Edit Calibrate State. The calibration constants that are displayed are Slope and Offset for the Process Variable and Temperature.

A Slope of less than 0.2 or greater than 5 indicates a potentially bad process calibration point or poorly performing sensor. In these cases, the text string BAD.CAL (bad calibration) is displayed in the secondary display region. The user is returned to the beginning of the calibration cycle after the bad calibration has been reported.

An Offset value of less than -100 mS/cm or greater than 100 mS/cm also indicates a potentially bad process calibration or poorly performing sensor. Again, a bad calibration will be reported, and the user returned to the beginning of the calibration cycle.

For temperature, a bad calibration will be reported and calibration values will not be accepted for Slope values that are less than 0.2 or greater than 1.5 and Offset values that are less than -40°C or greater than +40°C. As with conductivity, temperature calibrations use smart software routines that automatically adjust the Slope, Offset, or Both values based on the calibration value being entered and calibration history if it exists.

Additional Diagnostic Messages

Other diagnostic messages may appear during transmitter programming. These messages include BAD.VAL (bad value) and DENIED.

BAD.VAL indicates the attempted numeric entry of a value that is out of the allowed transmitter range. See the Specification Section for transmitter range limits.

DENIED indicates incorrect entry of a security password. See the Security Mode section for more information.

SENSOR TROUBLESHOOTING

If the sensor is suspected of being problematic, a quick visual inspection in many cases will identify the problem. If nothing can be seen, a few electrical tests using a digital multimeter can be performed to determine if the sensor is faulty. Some of these tests can be performed with the sensor either in or out of the process stream.

Visual Sensor Inspection

Remove the sensor from the process and visually check the following:

Sensor body
Inspect the sensor body for cracks and distortions. If any are found, contact your local ABB representative for alternative sensor styles and materials.

Cable and connectors

Inspect the sensor cable for cracks, cuts, or shorts. If a junction box and/or extension cable are used, check for moisture, oil, corrosion, and/or particulates where connections are made. All connections must be dry, oil-free, corrosion-free, and particulate-free. Even slight amounts of moisture, corrosion, and particulates can short sensor signals and affect conductivity readings. Check to see that all wiring is dry and not shorting against any metal, conduit, or earth grounds.

O-ring seals

Inspect the sealing O-rings for attack by the process liquid. If the O-rings show evidence of corrosion, distortion, or deterioration, contact your local ABB representative for alternate material choices.

Sensor Electronic Test

Toroidal conductivity sensors can be electronically tested to verify the integrity of the sensor and cable. The sensor leads and automatic temperature compensator leads must be disconnected from the transmitter before any tests can be performed. Additionally, these tests require a Digital Multimeter (DMM) that has a conductance function capable of 0 to 200 nS and a resistance function capable of 0 to 20 kohms.

The temperature sensor can be tested with the sensor in the process and is tested using the following procedure:

1. Check the resistance of the Temperature Sensor by measuring the resistance between the yellow and blue Temperature Compensator leads.

For a 3 kohm Balco RTD, the expected resistance can be calculated using:

$$R_{TC} = (((T - 25) * 0.0045) + 1) * 3000$$

where T is in degrees Celsius. The measured resistance should be within the expected value by ± 15%.

For a Pt100 RTD, the expected resistance can be calculated using:

$$R_{TC} = 100 + (T * 0.385)$$

where T is in degrees Celsius. The measured resistance should be within the expected value by ± 5%.

For the Pt1000 RTD, the expected resistance can be calculated using:

$$R_{TC} = 1000 + (T * 3.85)$$

where T is in degrees Celsius. The measured resistance should be within the expected value by ± 5%.

Moisture intrusion into the sensor can be detected without the sensor removed from the process using the following procedure:

1. Check the conductance between the yellow Temperature Sensor lead and each of the other sensor leads (i.e., blue, red, white, black, and heavy green leads). The reading must be less than 0.05 nS.

2. Check the conductance between the blue Drive lead and one of the Sense leads (i.e., white or red). The reading must be less than 0.05 nS.

3. Check the conductance between the blue Drive lead and the exposed metal surface on the back of the sensor. Repeat using the red Sense lead. The reading must be less than 0.05 nS.

4. Check the conductance between the heavy green lead (i.e., Shield) and each of the other sensor leads (i.e., blue, yellow, black, green, red, and white leads). The reading must be less than 0.05 nS.

Transmitter Electronic Test

The TB82TC Profibus PA Transmitter can be electronically tested using a known good sensor and decade resistance source or a set of resistors. To perform this type of test, use the following procedure:

1) Connect the known good sensor to the transmitter.
2) Using a six-inch length of 22 AWG or larger wire, thread the wire through the center bore of the sensor three times.
3) Connect the wire ends across the decade resistance box or appropriate resistor to provide the sensor with a resistive load.
4) Set the transmitter temperature compensation (TC.TYPE) to MANUAL.
5) Conduct a Zero and Span-Point Calibration.

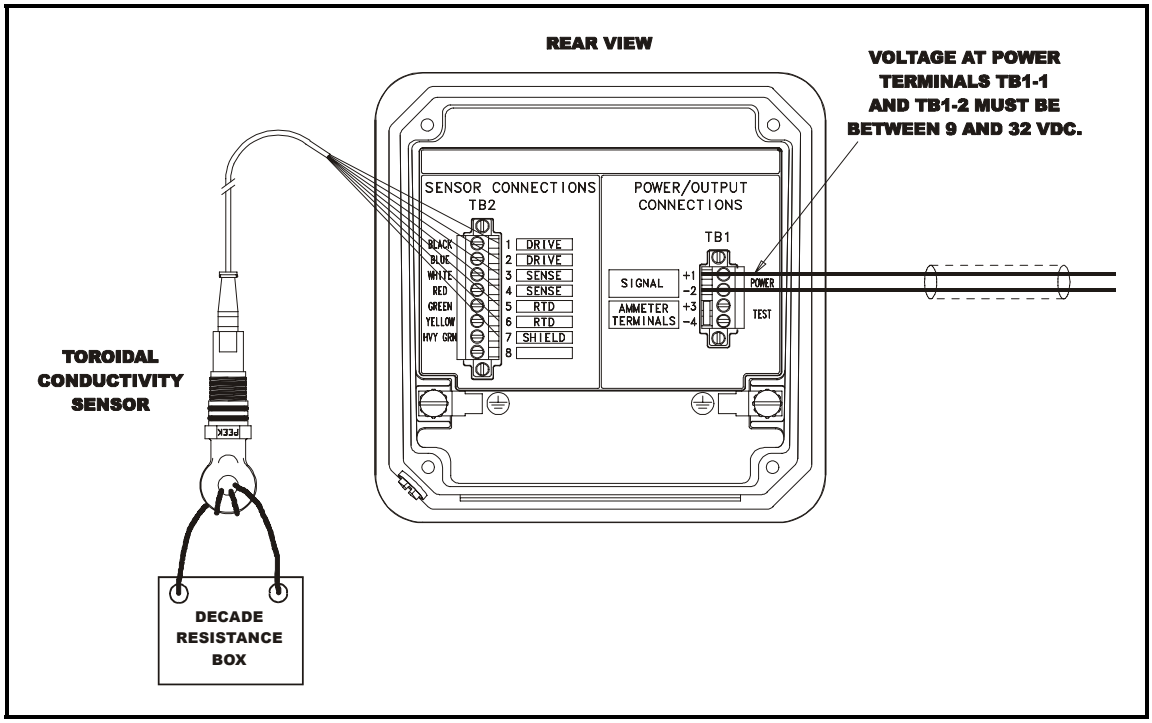

Figure 36 – Sensor Simulation Setup

6) Set the decade resistance box to the values indicated in the following table:

Variable Resistance (ohm)	Desired Display Value	Actual Display Value
Open	0.0 µS/cm	
500,000	41 µS/cm	
200,000	103 µS/cm	
50,000	413 µS/cm	
20,000	1031 µS/cm	
5,000	4.13 mS/cm	
2,000	10.31 mS/cm	
500	41.3 mS/cm	
200	103.1 mS/cm	
50	413 mS/cm	
20	1031 mS/cm	
10.32	1999 mS/cm	

DIAGNOSTIC INFORMATION RECEIVED FROM THE FIELDBUS

Dynamic variables and diagnostic information are continually passed onto the fieldbus during each device transmission. Most engineering tools and/or system/host workstations provide the ability to view such information. Dynamic variable status contains two components: data quality and sub-status. The following table briefly outlines the dynamic variable status.

Quality	Sub-status
Good (non-cascade)	1) OK. 2) Update event. 3) Block has active advisory alarm (priority < 8). 4) Block has active critical alarm (priority > or = 8). 5) Block has unacknowledged update event. 6) Unacknowledged advisory alarm. 7) Unacknowledged critical alarm. 8) Initiate fail safe. 9) Maintenance required.
Uncertain	1) Nonspecific. 2) Last usable value. 3) Substitute set. 4) Initial value. 5) Sensor conversion not accurate. 6) EU range violation. 7) Sub-normal. 8) Configuration error. 9) Simulated value. 10) Sensor Calibration.
Bad	1) Nonspecific. 2) Configuration error. 3) Not connected. 4) Device failure. 5) Sensor failure. 6) No communication, with last usable value. 7) No communication, with no last usable value. 8) Block Out of Service.

In addition to the dynamic variable status, Physical Block Diagnosis and Global Status provide information on the condition of hardware or software components that are associated with and/or directly impact the correct operation of the transmitter. The following table lists the possible diagnostic information:

Physical Block Diagnosis		Physical Block Global Status
Object	**Problem Description**	
1) DIA_HW_ELECTR 2) DIA_HW_MECH 3) DIA_MEM_CHKSUM 4) DIA_MEASUREMENT 5) DIA_CONF_INVAL 6) DIA_WARMSTART 7) DIA_COLDSTART 8) DIA_MAINTAINANCE 9) IDENT_NUMBER 10) EXTENSION_AVAILABLE 11) Calibration Error	1) Hardware Electronic Failure 2) Hardware Mechanical Failure 3) Memory Error 4) Measurement Failure 5) Invalid Configuration 6) Initiated a Warmstart 7) Initiated a Coldstart 8) Maintenance Required 9) ID Violation 10) Additional Diagnostics Available 11) Calibration Error (Device Specific)	1) Failure 2) Maintenance Request 3) Limits

Transmitter diagnostic conditions (i.e., Problem and Error Codes) are displayed as Extended Status information. Since these conditions have an impact on the Dynamic Variable quality and Block parameters, each diagnostic condition has been mapped as follows:

Problem/Error Code and Text Prompt		Problem & Error Description	PV Status	SV1 Status	SV2 Status	SV3 Status	PB Diagnosis	PB Global Status
Code	Text							
EC1	PV.AD	Process Variable Over/Under Range	Bad (Device failure)	N/A	Bad (Device failure)	Bad (Device failure)	Hardware Electronic Failure, Measurement Failure, Maintenance Required	Failure
EC3 To EC7	xx.PCB	Incorrect Input Board	Bad (Device Failure)	Bad (Device Failure)	Bad (Device Failure)	Bad (Device Failure)	Hardware Electronic Failure, Measurement Failure, Maintenance Required	Failure
PC8	HI.PV	PV above/below transmitter range.	Uncertain (EU Range Violation)	N/A	N/A	Uncertain (EU Range Violation)	Hardware Mechanical Failure, Maintenance Required	Maintenance Request, Limits
PC9	LO.PV							
PC10	HI.TEMP	Temperature above/below transmitter range.	Uncertain (Sensor Conversion Not Accurate)	Uncertain (EU Range Violation)	N/A	Uncertain (Sensor Conversion Not Accurate)	Hardware Mechanical Failure, Invalid Configuration, Maintenance Required	Maintenance Request, Limits
PC11	LO.TEMP							
PC12	TEMP.AD	Open, missing or shorted temperature sensor.	Uncertain (Sensor Conversion Not Accurate)	Bad (Sensor Failure)	N/A	Uncertain (Sensor Conversion Not Accurate)	Invalid Configuration, Maintenance Required	Maintenance Request
PC20	BAD.SEE	Bad SEEPROM or bad input PCB assembly	Uncertain (Sensor Conversion Not Accurate)	Uncertain (Sensor Conversion Not Accurate)	Uncertain (Sensor Conversion Not Accurate)	Uncertain (Sensor Conversion Not Accurate)	Memory Error	Maintenance Request
PC21	NO.F.CAL	Missing factory calibration	Uncertain (Sensor Conversion Not Accurate)	Uncertain (Sensor Conversion Not Accurate)	Uncertain (Sensor Conversion Not Accurate)	Uncertain (Sensor Conversion Not Accurate)	Memory Error	Maintenance Request
PC30 To PC44	xx.F.CAL	SEE PV factory calibration errors	Uncertain (Sensor Conversion Not Accurate)	N/A	Uncertain (Sensor Conversion Not Accurate)	Uncertain (Sensor Conversion Not Accurate)	Memory Error	Maintenance Request
PC45 To PC48	xx.F.CAL	SEE Temperature factory calibration errors	N/A	Uncertain (Sensor Conversion Not Accurate)	N/A	N/A	Memory Error	Maintenance Request
PC50 To PC64	xx.CHKS	SEE PV checksum errors	Uncertain (Sensor Conversion Not Accurate)	N/A	Uncertain (Sensor Conversion Not Accurate)	Uncertain (Sensor Conversion Not Accurate)	Memory Error	Maintenance Request
PC65 To PC68	xx.CHKS	SEE Temperature checksum errors	N/A	Uncertain (Sensor Conversion Not Accurate)	N/A	N/A	Memory Error	Maintenance Request

PV represents Primary Value and SV represents Secondary Value.

Alarm Summary

Whenever an alarm is enabled and the alarm condition occurs, the relevant bit in the ALARM_SUM object of the corresponding block is set.

Alarm Type	Description
HI_HI_Alarm	Supported by AI. Indicated when the OUT value goes above the HI_HI_LIM value and cleared when the OUT value drops back down below the HI_HI_LIM minus ALARM_HYS values.
HI_Alarm	Supported by AI. Indicated when the OUT value goes above the HI_LIM value and cleared when the OUT value drops back down below the HI_LIM minus ALARM_HYS values.
LO_LO_Alarm	Supported by AI. Indicated when the OUT value goes below the LO_LO_LIM value and cleared when the OUT value rises back over the LO_LO_LIM plus ALARM_HYS values.
LO_Alarm	Supported by AI. Indicated when the OUT value goes below the LO_LIM value and cleared when the OUT value rises back over the LO_LIM plus ALARM_HYS values.
Update Event	Supported by PB, TB and AI. Indicated when a static revision increment occurs in the block due to modification of a static parameter.

Limit alarm bits are set to 1 or 0. A ‘1’ represents an active alarm and a ‘0’ represents an inactive alarm in the ALARM_SUM object.

DISMANTLING AND REASSEMBLY

Warning.
Substitution of any components other than those assemblies listed in this section will compromise the certification listed on the transmitter nameplate. Invalidating the certifications can lead to unsafe conditions that can injure personnel and damage equipment.

Caution.
Dismantling and reassembly should not be carried out on site because of the risk of damage to components and printed circuits as a result of adverse environmental conditions such as humidity, dust, etc. The dismantling and reassembly procedures given below should be carried out in the listed order to avoid instrument damage.

Required tools
Medium flat-bladed screwdriver
Small Phillips screwdriver

Dismantling

a) Use the bladed screwdriver to loosen the four captive screws that secure the Front Bezel and/or Rear Cover Assemblies (depending on which component is being replaced) and remove the cover(s).
b) Remove Power Supply and/or Input PCB Assemblies by unscrewing the two Phillips screws and unplug the assemblies from their connectors.
c) Remove Microprocessor/Display PCB Assembly by unscrewing the four Phillips screws and unplug the keypad cable by lifting the locking arms on the side of the connector and remove the cable from the connector.
d) Remove the cable hubs by screwing the retaining nut and removing the hub from the Shell Assembly.

Reassembly
Check that the gaskets are not damaged and have a thin layer of silicone grease. If the gaskets are damaged, replace gaskets.

a) Install the Microprocessor/Display by securing the assembly with the four Phillips screws and installing the keypad cable into the connector and locking it into place by pushing down the two locking arms on the side of the connector.
b) Install the Power Supply and/or Input PCB Assemblies into their respective connector and secure the assemblies with the two Phillips screws per assembly.
c) Attach cable hubs by installing the gaskets onto the hubs and insert the hubs into the ports in the Shell assembly. Secure the hubs by tightening the nut onto the hub threads.
d) Install the Front Bezel and/or Rear Cover Assemblies and secure by tightening the four captive screws per assembly using a bladed screwdriver.

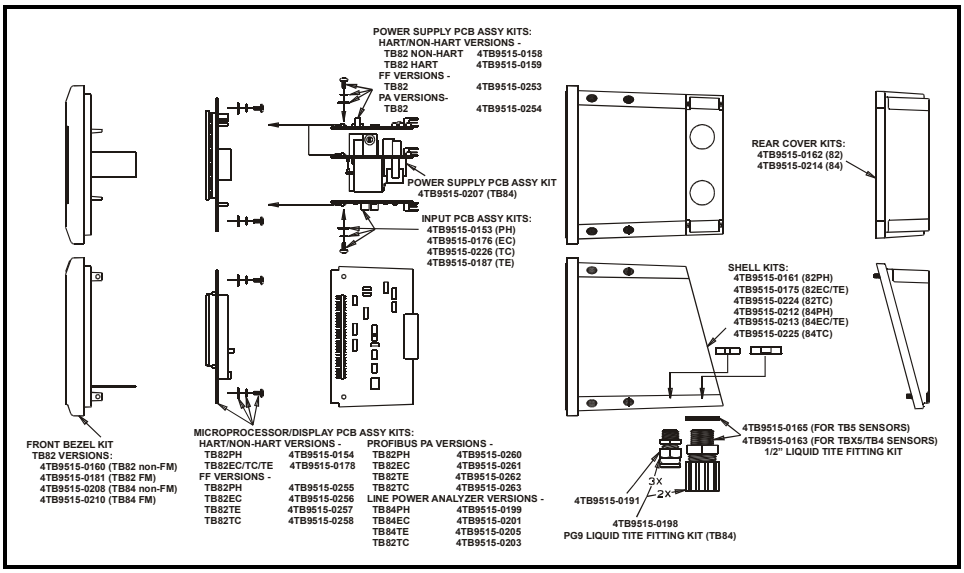

Figure 37 - TB82TC PA Transmitter Exploded View

SPECIFICATIONS

Property	Characteristic/Value
Process Display Range Conductivity Concentration	 0 µS/cm to 1999 mS/cm 0.000 to 1999 Digits (EU Configurable)
Temperature Display Range	-20° to 300°C (-4° to 572°F).
Sensor Full Scale Measurement Ranges	0 µS/cm to 1999 mS/cm
Resolution, Display Conductivity Concentration Temperature	 1 µS/cm 0.001 Digits (Configuration Dependent) 1°C, 1°F.
Accuracy, Display Conductivity Temperature	 ±0.1% Full Scale 1°C
Nonlinearity, Display Conductivity Temperature	 ±0.1% Full Scale 1°C
Repeatability, Display Conductivity Temperature	 ±0.5% Full Scale 1°C
Stability, Display Conductivity Temperature	 ±2 LSD Typical; 5 LSD Maximum 1°C
Temperature Compensation	Manual (0.1N KCl based) Automatic - Configurable as: Standard (0.1N KCl based) Coefficient (0 to 9.99%/°C adjustable) 0 to 15% NaOH 0 to 20% NaCl 0 to 18% HCl 0 to 20% H_2SO_4 User Defined
Input Types Conductivity/ Concentration Temperature	 ABB TB404 Toroidal Conductivity Sensors ABB TB404 Toroidal Conductivity Sensors 3 kohm Balco, Pt100, Pt1000
Dynamic Response	3 sec. for 90% step change at 0.00 sec. damping.
Ambient Temperature Effect Conductivity Temperature	 ±0.1%/°C FS @ 95% Relative Humidity ±0.2%/°C Displayed Value @ 95% Relative Humidity
Minimum Span Conductivity Concentration Temperature	 100 µS/cm 5% Maximum Concentration Range 10 °C
Maximum Span (full scale settings) Conductivity Concentration Temperature	 1999 mS/cm 1999 Digits 300 °C, 540 °F (-20 to 200 °C, -4 to 572 °F)
Damping	Continuously adjustable from 0.0 to 99.9 seconds
Supply Voltage	9 to 32 Vdc (9 to 24 Vdc for agency certified IS applications) 15 mA quiescent current
Turn-On Time	4 seconds typical, 6 seconds maximum
Maximum Sensor Cable Length	50 ft (15.2 m)
Sensor Diagnostic	PV/Temperature Over/Under Range, Slope and Offset Check, PV Drift and Instability

Property	Characteristic/Value
Diagnostic Notification Local HMI	 FAULT icon indication.
Environmental Operating temperature LCD Range Storage temperature	 -20° to 60°C (-4° to 140°F) -20° to 60°C (-4° to 140°F) -40° to 70°C (-40° to 158°F)
Mounting Effect	None
Enclosure Classification	NEMA 4X IP65
Size Height Minimum panel depth Maximum panel cutout Recommended panel cutout	 144 mm high x 144 mm wide x 171 mm long (5.66 in. high x 5.66 in. wide x 6.70 in. long) 145 mm (5.70 in.) 136.7 mm x 136.7 mm (5.38 in. x 5.38 in.) 135 mm x 135 mm (5.33 in. x 5.33 in.)
Weight	4.2 lb (1.9 kg) without mounting hardware 7.5 lb (3.4 kg) with Pipe Mounting Hardware
EMC Requirements	CE certified: Electromagnetic Conformance - IEC61326-1: 2000 EN55011: 1991 (CISPR11: 1990) Class A EN61000-4-2: 1995 4 kV Contact 6 kV Indirect EN61000-4-3: 1997 10 V/m EN61000-4-4: 1995 1 kV EN61000-4-5: 1995 2kV Line to Earth 1kV Line to Line EN61000-4-6: 2001 3V EN61000-4-8: 1994 30A/m
Agency Approvals[2] **Factory Mutual (FM) - pending** Intrinsic safety/FISCO Nonincendive (T5) **Canadian Standards Association (CSA)** Intrinsic safety/FISCO Nonincendive **ATEX** (Conforms with ATEX 100A) Intrinsic safety/FISCO	 Class I, II, III; Division 1; applicable Groups A, B, C, D, E, F and G; T3C when used with appropriate barriers per Drawing P0884. Class I, Division 2, Groups A, B, C, and D. Class II, Division 2, Groups F and G. Class III, Division 2. Class I, II, III; Division 1; applicable Groups A, B, C, D, E, F and G; T3C when used with appropriate barriers per Drawing P0883. Class I, Division 2, Groups A, B, C, and D. Class II, Division 2, Groups E, F and G. Class III, Division 2. ATEX Category II 1G EEX ia, Zone 1; Group IIC, T4 when used with appropriate barriers.

[2] Hazardous location approvals for use in flammable atmospheres are for ambient conditions of –20C to 60 C (-4 F to 140 F), 86 to 108 kPa (12.5 to 15.7 psi) with a maximum oxygen concentration of 21%.

GLOSSARY OF PROGRAMMING TEXT PROMPTS

TEXT STRING	DESCRIPTION
3K.BLCO	3 kohm Balco (Temperature Compensation).
AAAAAA	Alphanumeric Entry.
ACCEPT	Accept Calibration Variance
AI-.BLK	Analog Input Block where '-' is the block number.
AI-.OUT	Analog Input Output value where '-' is the block number.
ANALZR	Analyzer State.
AUTO	Automatic Temperature Compensation (Nernstian) or Automatic Block Mode Handling.
BAD.CAL	Bad Calibration - Entered values caused the calculated values to exceed maximum values.
BAD.VAL	Bad Value - Entered value exceeded maximum allowable value for the entered parameter.
CALIBR	Calibrate Mode.
CON.CAL	Conductivity or Concentration Calibration State.
CONCEN	Concentration Analyzer State.
COND	Conductivity Mode.
CONFIG	Configure Mode.
D.P.POS	Decimal Point Position.
DAMPNG	Damping of the displayed primary value on the transmitter's HMI.
DENIED	An incorrect security password has been entered.
DISABL	Disable.
DRIFT	Drifting primary value during calibration.
EDT.CAL	Edit Calibrate State.
ENABLE	Enable.
FACTRY	Factory State
HARD.LK	Operation cannot be completed due to Hardware write protection.
H2SO4	Sulfuric Acid.
HCL	Hydrochloric Acid.
HIGH.PV	Primary Variable value limit for HI.PV fault.
ID. SEL	Device Profile Identification Select State
K1/K25	Conductivity at Temperature to the Temperature Compensated Conductivity at the reference temperature for Point #1. Points 2 through 6 are represented in the same manner.
LOW.PV	Primary Variable value limit for LO.PV fault.
MANUAL	Manual Temperature Compensation (Nernstian).
MODIFY	Modify Configure State.
NACL	Sodium Chloride.
NAOH	Sodium Hydroxide.
NEW.VAL	New Calibration Value - Temperature value expected during a Temperature Calibration.
NEW.VL.C	New Temperature Value in degrees Celsius.
NEW.VL.F	New Temperature Value in degrees Fahrenheit.
NO D.P.	No Decimal Point is desired.
NO.ICON	No Icon is desired in the primary display.
NONE	None.
OFFSET	Offset Value.
OOS	Out Of Service.
OUTPUT	Output Mode.
PA. ADR	Profibus PA Address
PASSWD	Security Password.
PT 100	Pt100 Ohm RTD.
PT1000	Pt1000 Ohm RTD.
PV.LIM	Primary Variable limit state.
PV OFF	Process Variable Offset Value for the installed sensor.
PV SLP	Process Variable Slope Value for the installed sensor.
RESET?	Query to Reset parameters to default values.
REV.A10	Software Revision A10.

TEXT STRING	DESCRIPTION
RST.ALL	Reset All Parameters to Factory Settings.
RST.CAL	Reset Calibration Constant and Data to Factory Settings.
RST.CON	Reset Configurations to Factory Defaults.
RST.SEC	Reset Security - Remove any existing security.
RST.SFT	Software Reset - Initiate a reboot and self-test function.
SAVE?	Would you like to Save the Configuration?
SEC.DSP	Secondary Display Mode.
SECUR	Security Mode.
SER.NUM	Device Serial Number State
SLF.TST	Self Test.
SLOPE	Slope for the installed sensor (Process Variable or Temperature).
SPAN.PT	Span-Point Calibration State of Operation.
SPAN.VL	Span-Point Calibration value.
STABL?	Is the displayed Process Variable Stable?
STNDBY	Standby.
T.OFF^{o}C	Temperature Offset in degrees Celsius.
T.OFF^{o}F	Temperature Offset in degrees Fahrenheit.
TB.PV.LO	Transducer Block Process Value Low Range Value.
TB.PV.HI	Transducer Block Process Value High Range Value.
TB.RNGE	Transducer Block Range Value State.
TC.COEF	Temperature Compensation Coefficient.
TC.TYPE	Temperature Compensation Type State
TMP	Temperature.
TMP.CAL	Temperature Calibration State.
TMP.SLP	Temperature Slope Value.
TMP.SNS	Temperature Sensor Type State.
TMP^{o}C	Temperature in degrees Celsius.
U.D.UNIT	User-defined Engineering Unit.
UNITS	Units.
UNSTBL	Unstable primary value during calibration.
USER	User State.
USR.DEF	User-defined.
VIEW	View Current Configuration.
WRT.ERR	Error saving data.
X1.COND	Conductivity independent variable (i.e., X Point) value for break point 1 in conductivity units. Points 2 through 6 are represented in the same manner.
Y1.CONC	Concentration dependent variable (i.e., Y Point) value for break point 1 in concentration units. Points 2 through 6 are represented in the same manner.
ZERO.PT	Zero-Point Calibration State of Operation.
ZERO.VL	Zero-Point Calibration value.

TB82TC WORKSHEET

Tag:	Date:
Analyzer Type:	
☐ CONDUCTIVITY	☐ CONCENTRATION ☐ 0-15% NaOH ☐ 0-20% NaCl ☐ 0-18% HCl ☐ 0-20% H_2SO_4 ☐ User-defined: Engineering Units:_____ COND1:_____ CONC1:_____ COND2:_____ CONC2:_____ COND3:_____ CONC3:_____ COND4:_____ CONC4:_____ COND5:_____ CONC5:_____ COND6:_____ CONC6:_____
Temperature Sensor: ☐ None ☐ 3k Balco ☐ Pt100 ☐ Pt1000	
Temperature Compensation Type: ☐ Manual ☐ Auto: ☐ 0-15% NaOH ☐ 0-20% NaCl ☐ 0-18% HCl ☐ 0-20% H_2SO_4 ☐ User-defined: T1:_____ K_{STD}/K_1:_____ T2:_____ K_{STD}/K_2:_____ T3:_____ K_{STD}/K_3:_____ T4:_____ K_{STD}/K_4:_____ T5:_____ K_{STD}/K_5:_____ T6:_____ K_{STD}/K_6:_____	
Primary Variable Limit Values: Low Limit _____	High Limit _____
Security: ☐ Configure ☐ Calibrate ☐ Security Password: _____	

Factory Default Settings

Software		Hardware	
Analyzer Type:	Conductivity	**Microprocessor/Display PCB** SW1 (Hardware Lockout):	OFF, **Disable Lockout**
Temperature Sensor Type:	3k, Balco	SW2 (Simulation):	OFF
Temperature Compensation Type Reference Temperature:	Manual 25°C	SW3 (Cold Start): SW4 (Not Used):	OFF, **Disable Cold Start** OFF
Primary Variable Limit Values Low Limit: High Limit:	0 µS/cm 1999 mS/cm		

PRODUCTS & CUSTOMER SUPPORT

A Comprehensive Instrumentation Range

Analytical Instrumentation

- **Transmitters**
  On-line pH, conductivity, and dissolved oxygen transmitters and associated sensing systems.
- **Sensors**
  pH, redox, selective ion, conductivity and dissolved oxygen.
- **Laboratory Instrumentation**
  pH and dissolved oxygen meters and associated sensors.
- **Water Analyzers**
  For water quality monitoring in environmental, power generation and general industrial applications including:
  pH, conductivity, ammonia, nitrate, phosphate, silica, sodium, chloride, fluoride, dissolved oxygen, hydrazine, and turbidity.
- **Gas Analyzers**
  Zirconia, katharometers, hydrogen purity and purge-gas monitors, thermal conductivity.

Controllers & Recorders

- **Controllers**
  Digital display, electronic, pneumatic. Discrete single-loop and multi-loop controllers which can be linked to a common display station, process computer or personal computer.
- **Recorders**
  Circular and strip-chart types (single and multi-point) for temperature, pressure, flow and many other process measurements.

Electronic Transmitters

- **Smart & Analog Transmitters**
  Draft, differential, gauge and absolute pressure measurement. Also, liquid level and temperature.
- **I to P Converters and Field Indicators**

Flow Metering

- **Magnetic Flowmeters**
  Electromagnetic, insertion type probes and water meters.
- **Turbine Flowmeters**
- **Wedge Flow Elements**
- **Mass Flow Meters**
  Transmitters, sensors, controllers and batch/display units.

Level Control

- **Submersible, Capacitance & Conductivity.**

Pneumatic Instrumentation

- **Transmitters**
- **Indicating Controllers**
- **Recording Controllers**

Customer Support

ABB Instrumentation provides a comprehensive after sales service via a Worldwide Service Organization. Contact one of the following offices for details on your nearest Service and Repair Center.

United States of America
ABB Incorporated
9716 S. Virginia St., STE E
Reno, Nevada 89521
Tel: +1 775 850 4800
Fax: +1 775 850 4808

United Kingdom
ABB Instrumentation Limited
Oldends Lane
Stonehouse, Glos.
UK, GL10 3TA
Tel: +44 (0)1453 826661
Fax: +44 (0)1453 829682

Website: www.abb.com

Client Warranty
Prior to installation, the equipment referred to in this manual must be stored in a clean, dry environment, in accordance with the Company's published specification. Periodic checks must be made on the equipment's condition.

In the event of a failure under warranty, the following documentation must be provided as substantiation:

1. A listing evidencing process operation and alarm logs at time of failure.
2. Copies of operating and maintenance records relating to the alleged faulty unit.

TROUBLE SHEET

WARRANTY REPAIR ☐ ☐ REPAIR ORDER

Rejection or discrepancy reports Copy attached ☐ Not available ☐

- IDENTIFICATION

Customer:	Telephone:	Fax:
Address:		

Purchase order No.
Plant
Name of person to contact
Instrument Nomenclature
Model
Serial Number

- OPERATING CONDITIONS

Specify location, environmental conditions, type of service and approximate number of operating hours or date of installation if known.

- REASON FOR RETURN

Trouble found during: Installation ☐ Commissioning ☐ Maintenance ☐

At start up ☐ On service ☐

Shipping information for the return of the equipment

Material returned for factory repair, should be sent to the nearest ABB Service Center, transportation charges prepaid by the Purchaser.

Please enclose this sheet duly completed to cover letter and packing list

Date	Signature	Originator

EC DECLARATION OF CONFORMITY

ABB Inc.
9716 S. Virginia St., Suite E
Reno, Nevada 89511
USA

We declare under our sole responsibility that the product:

TB82TC PROFIBUS PA Transmitter Series

is in conformity with the following standards:

Electromagnetic Conformance - IEC61326-1: 2000

EN55011: 1991 (CISPR11: 1990)	Class A
EN61000-4-2: 1995	4 kV Contact
	6 kV Indirect
EN61000-4-3: 1997	10 V/m
EN61000-4-4: 1995	1 kV
EN61000-4-5: 1995	2kV Line to Earth
	1kV Line to Line
EN61000-4-6: 2001	3V
EN61000-4-8: 1994	30A/m

following the provisions of the EMC Directives 89/336/EEC and 93/68/EEC.

ABB Incorporated
Technical Manager
Stewart Thoeni

ABB has Sales & Customer Support expertise in over 100 countries worldwide

www.abb.com

The Company's policy is one of continuous product improvement and the right is reserved to modify the information contained herein without notice.

Printed in USA (05.25.2004)

© ABB 2004

ABB Inc.
9716 S. Virginia St., Suite E
Reno, Nevada 89511
USA
Tel: +1 (775) 850 4800
Fax: +1 (775) 850 4808

ABB Ltd
Oldends Lane, Stonehouse
Gloucestershire, GL10 3TA
UK
Tel: +44 (0)1453 826661
Fax: +44 (0)1453 829671

I-E67-TB82PA-4B May 25, 2004