FACTS

Improved productivity and economy of EAF process by means of SVC

In 1985, an ABB SVC (Static Var Compensator) came on line in Avesta Sheffield's steel plant in Degerfors, Sweden, to operate with a 40 MVA electric arc furnace (EAF) used for steel scrap melting and refining.

The SVC, rated at 10 Mvar inductive to 50 Mvar capacitive, serves the purpose of stabilizing the arc furnace bus voltage at a high value chiefly during the melting phase, thereby achieving a number of important benefits for the user of the EAF:

- An increase in available melting power which gives shorter melt down time and thereby higher productivity
- A decrease of specific electrode consumption due to more stable arcs
- A decrease of specific energy consumption due to lower radiation losses per melt
- A decrease of plant losses due to the decreased flow of reactive power
- Lower specific power billing due to a higher power factor at the point of common coupling.

The decreased specific electrode as well as energy consumption together with the more favourable power billing have effected a considerable reduction of the specific operating costs for the EAF process.

From a purely **technical** point of view, the SVC improves the EAF operation as well:

- A decrease of voltage fluctuations in own as well as neighbouring facilities
- An improved power handling capability
- Suppression of harmonic distortion in own as well as neighbouring facilities
- Suppression of negative phase sequence voltage in own as well as neighbouring facilities
- An improved power factor

Single-line diagram

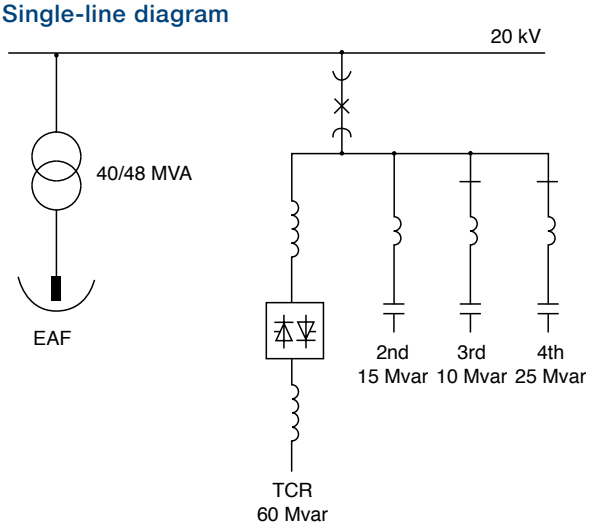

Power and productivity
for a better world™

Technical data	
Type of SVC	TCR/FC (Thyristor-controlled reactor plus harmonic filter banks)
Controlled voltage	20 kV
Dynamic range	10 Mvar (inductive) to 50 Mvar (capacitive)
Harmonic filtering	15 Mvar/2nd harmonic 10 Mvar/3rd harmonic 25 Mvar/4th harmonic
Power factor correction	From 0.8 (uncompensated) to >0.99 (compensated)
Control system	Individual phase control by means of fast-acting open loop reactive power control
Thyristor valve	3-phase water-cooled thyristor valve with magnetic firing

Summary of operating experience:	
Rated furnace power	40/48 MVA
Rated bus voltage	20 kV
Dynamic rating of SVC	60 Mvar
Power factor (compensated)	>0.99
Bus voltage improvement	12 %
Increase of available melting power	20 %
Production increase	10 %
Specific electrode consumption decrease	0.4 kg/ton
Specific energy consumption decrease	15 kWh/ton

Layout

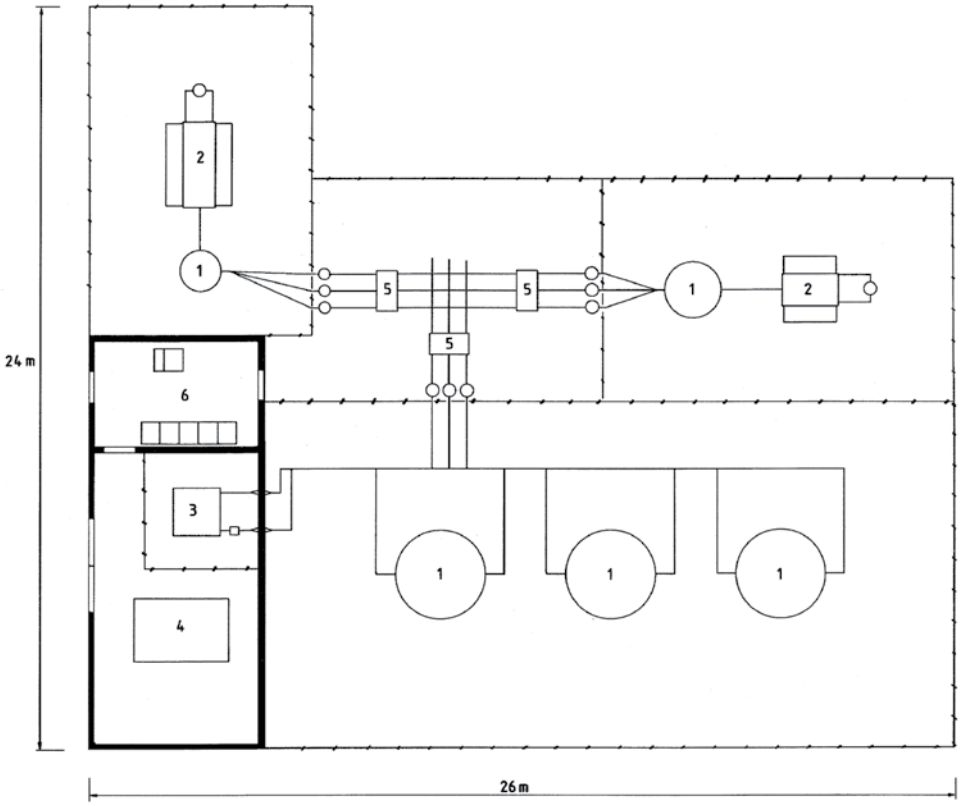

1. Reactor
2. Capacitor bank
3. Thyristor valve
4. Cooling equipment
5. Disconnector
6. Control room

(3rd harmonic filter placed elsewhere)

For more information please contact:

ABB AB
FACTS
SE-721 64 Västerås, Sweden
Phone: +46 21 32 50 00
Fax: +46 21 32 48 10

www.abb.com/FACTS

Application Note A02-0115 E, 2011-03

Power and productivity
for a better world™