01-12-06 Valid without signature

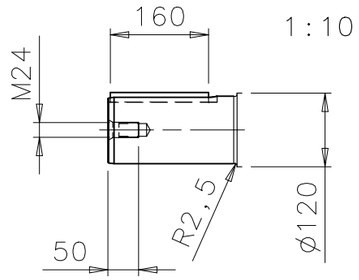

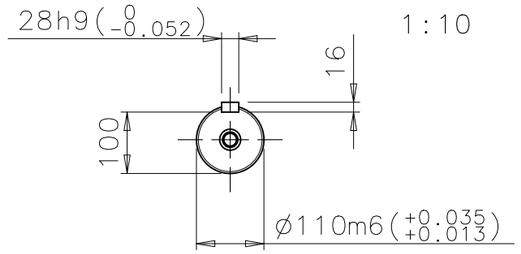

1	D-BEARING 6324/C3
2	N-BEARING 6319/C3
3	TERMINAL BOX FOR CONTROL CABLE ø10-14, 2xM20x1.5
4	SPM NIPPLE DE AND NDE
5	PT-1000 FOR BEARINGS (OPTIONAL)
6	MAIN TERMINAL BOX
7	FREE DISTANCE FOR COOLING
8	GREASING NIPPLE DE AND NDE
9	EARTHING, M12M FOR M3GM MAX 150mm^2

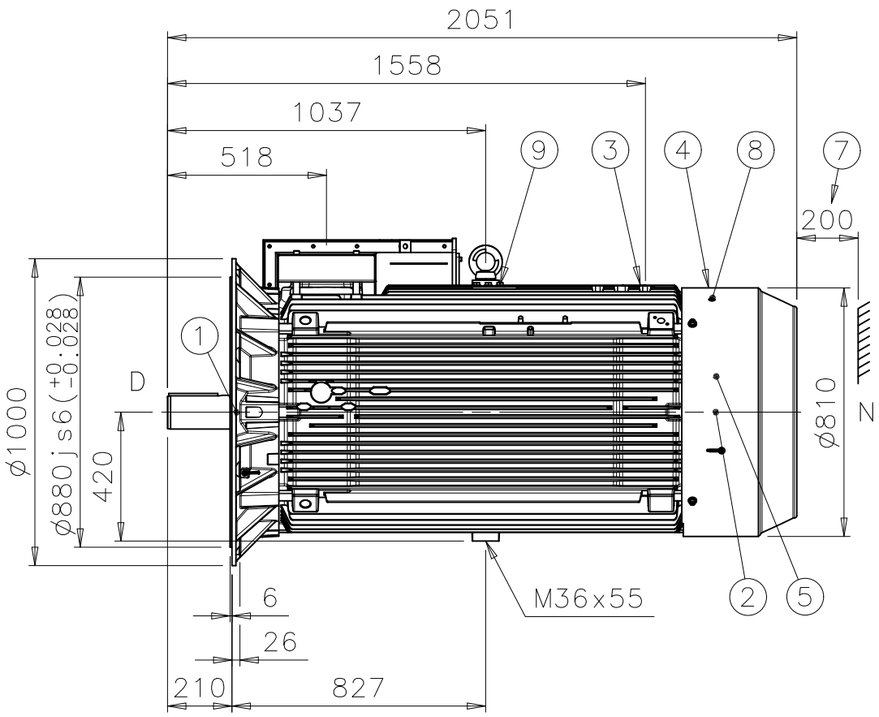

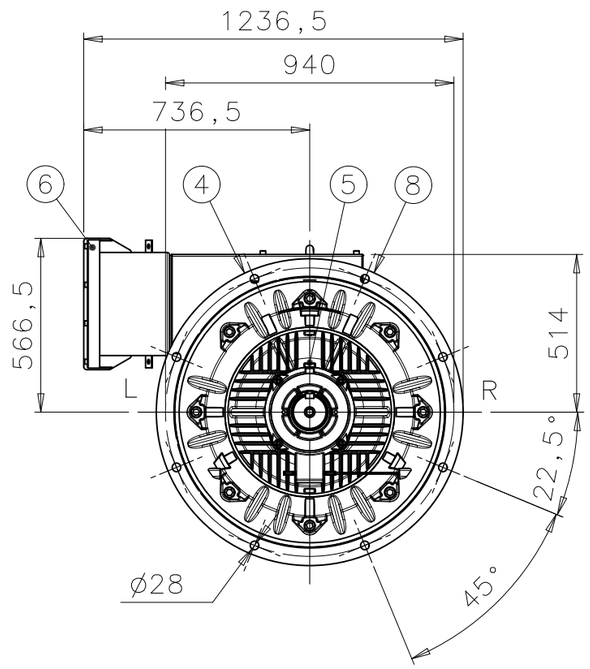

We reserve all rights in this document and in the information contained therein. Reproduction, use or disclosure to third parties without express authority is strictly forbidden.
© ABB Oy, Electrical Machines, Helsinki

General tolerances ISO 2768-mK
Threads according to ISO 965 toleranceclass 6H
Symbols for roughness acc. to ISO 1302

THE CUSTOMER IS RESPONSIBLE FOR THE DESIGN AND CONSTRUCTION OF THE FOUNDATION.
IT SHALL BE SUFFICIENTLY RIGID TO WHITSTAND SHORT CIRCUIT FORCES. TO AVOID RESONANCE VIBRATIONS THE FOUNDATION SHALL BE DESIGNED SO THAT THE NATURAL FREQUENCY (REED FREQUENCY) OF FOUNDATION TOGETHER WITH MACHINE IS NOT WITHIN ±20% OF RUNNING SPEED FREQUENCY.
THE CUSTOMER IS ALSO RESPONSIBLE FOR LATERAL AND TORSIONAL CRITICAL SPEED ANALYSIS OF THE COMPLETE INSTALLATION.

Rev	Change	Date	Prep.	Approved

Prepared 2006-10-20 M.VÄKIPARTA	Responsible dept. ATAP/PID	Title DIMENSION PRINT SQUIRREL CAGE MOTOR	Scale 1:20
Approved 2006-10-20 O.LAHTINEN	Take over dept.		
Material		Code 13 BM 400 A / 400	Language en
Supersedes	Superseded by	Type M3BM/GM 400LK4-12 B5	Size A3
ABB Oy, Electrical Machines, Helsinki		Document No. 3GZF500040-253 Revision A	Sheet 1/1