26-10-06 Valid without signature

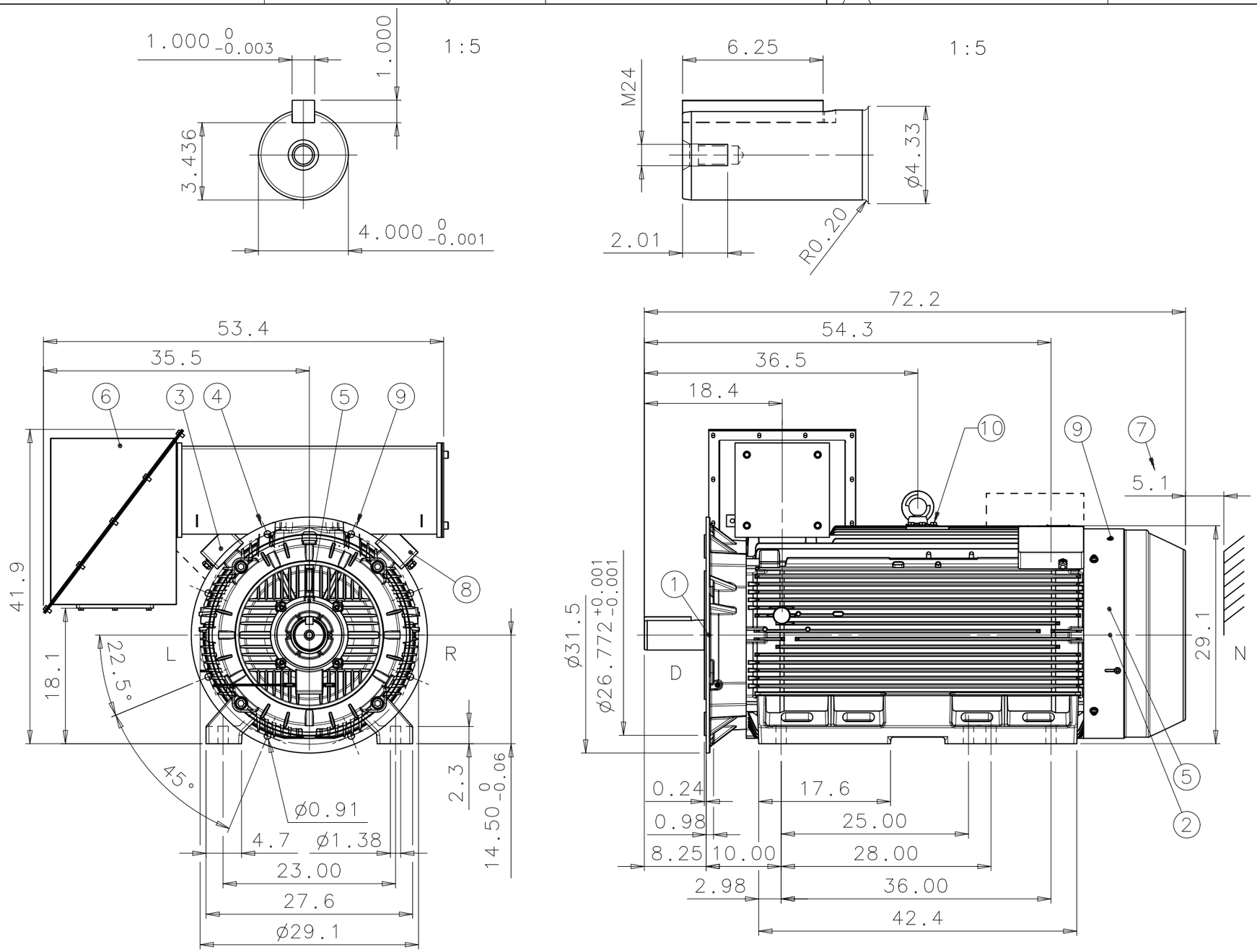

1	D-BEARING 6322/C3
2	N-BEARING 6316/C3 INSULATED 6316/C3 (OPTIONAL)
3	TERMINAL BOX FOR CONTROL CABLE ø10-14, 2xM20x1,5 LARGER TERMINAL BOX (OPTIONAL)
4	SPM NIPPLE DE AND NDE
5	PT-100 FOR BEARINGS (OPTIONAL)
6	MAIN TERMINAL BOX
7	FREE DISTANCE FOR COOLING
8	TERMINAL BOX FOR HEATING ELEMENT CABLE ø10-14,1xM20x1,5 (OPTIONAL)
9	GREASING NIPPLE DE AND NDE
10	EARTHING, M12, FOR M3GM MAX 150mm^2

DIMENSIONS IN INCHES

DURING THE INITIAL INSTALLATION PLACE 0.0787" SHIMS UNDER THE FEET OF THE MOTOR. THE CUSTOMER IS RESPONSIBLE FOR THE DESIGN AND CONSTRUCTION OF THE FOUNDATION. IT SHALL BE SUFFICIENTLY RIGID TO WITHSTAND SHORT CIRCUIT FORCES. TO AVOID RESONANCE VIBRATIONS THE FOUNDATION SHALL BE DESIGNED SO THAT THE NATURAL FREQUENCY OF FOUNDATION TOGETHER WITH MACHINE IS NOT WITHIN ±20% OF RUNNING SPEED FREQUENCY. THE CUSTOMER IS ALSO RESPONSIBLE FOR LATERAL AND TORSIONAL CRITICAL SPEED ANALYSIS OF THE COMPLETE INSTALLATION.

Rev	Change	Date	Prep.	Approved
B	M3BM->M3BM/GM	2006-10-24	AK	OL

Prepared 2006-06-16 M.VÄKIPARTA	Responsible dept. ATAP/PID	Title DIMENSION PRINT SQUIRREL CAGE MOTOR	Scale 1:15
Approved 2006-07-03 O.LAHTINEN	Take over dept.		
Material		Code 13 BM 58_NEMA A / 355	Language en
Supersedes	Superseded by	Type M3BM/GM 587LK4-12 B35	Size A3
ABB Oy, Electrical Machines, Helsinki		Document No. 3GZF500098-65 Revision B	Sheet 1/1

We reserve all rights in this document and in the information contained therein. Reproduction, use or disclosure to third parties without express authority is strictly forbidden. © ABB Oy, Electrical Machines, Helsinki

General tolerances ISO 2768-mK
Threads according to ISO 965 toleranceclass 6H
Symbols for roughness acc. to ISO 1302