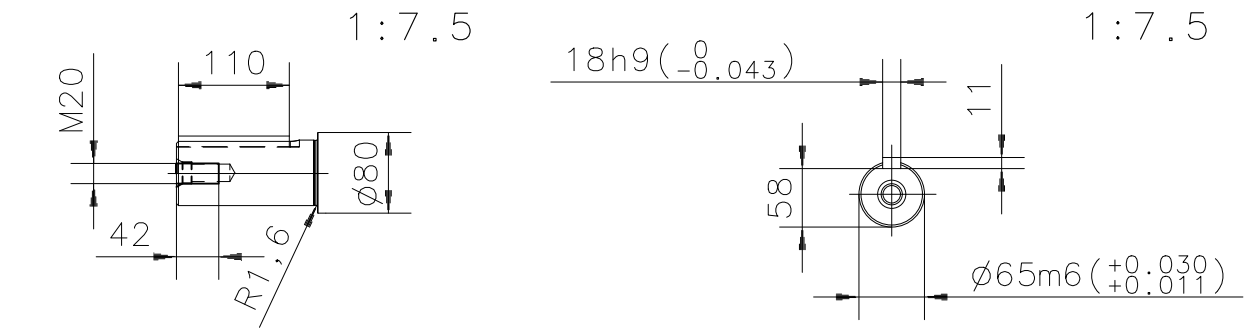

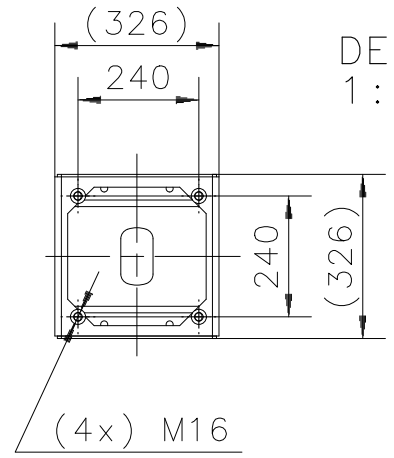

DETAIL X
1:15

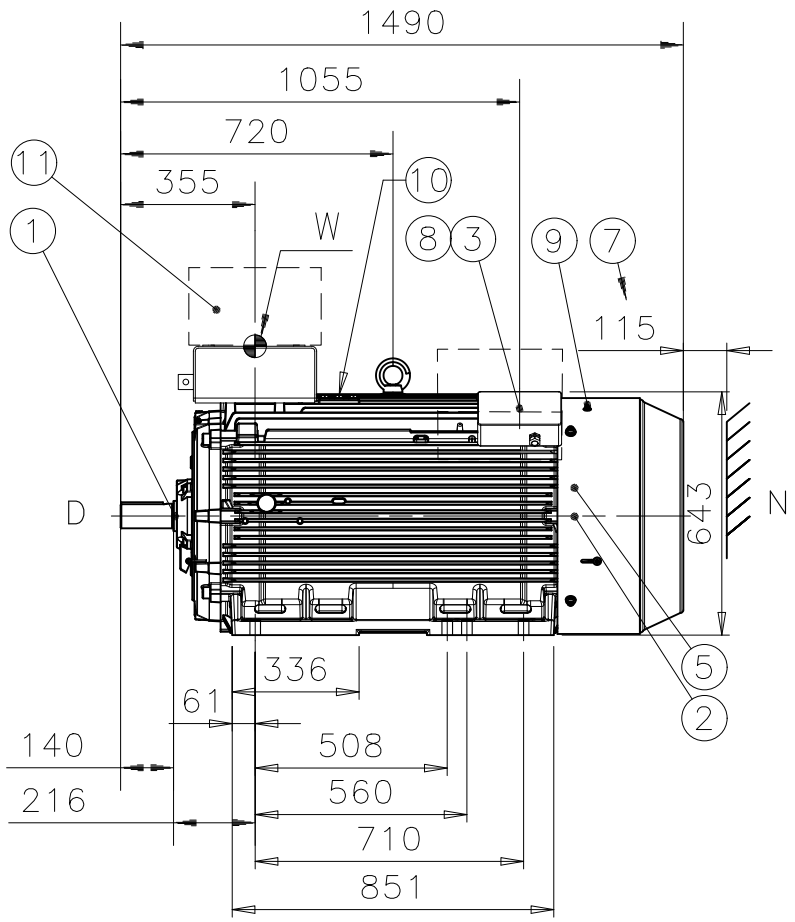

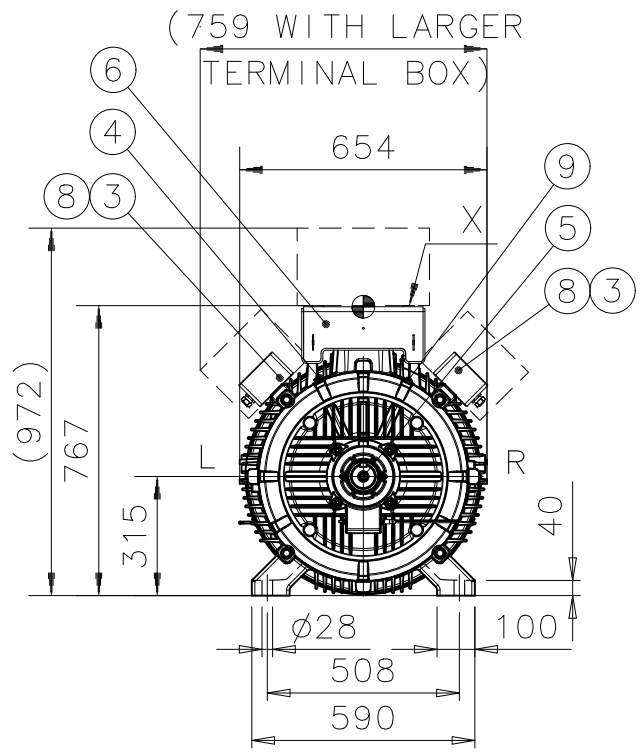

1	D-BEARING 6316M/C3
2	N-BEARING 6316M/C3 INSULATED 6316M/C3 (OPTIONAL)
3	TERMINAL BOX FOR CONTROL CABLE Ø10-14,2xM20x1,5 LARGER TERMINAL BOX (OPTIONAL)
4	SPM NIPPLE DE AND NDE
5	PT-100 FOR BEARINGS (OPTIONAL)
6	INTERMEDIATE BOX
7	FREE DISTANCE FOR COOLING
8	TERMINAL BOX FOR HEATING ELEMENT CABLE Ø10-14,1xM20x1,5 (OPTIONAL)
9	GREASING NIPPLE DE AND NDE
10	EARTHING, M12, FOR M3GM MAX 150mm^2
11	TRANSPORTATION COVER, THREE (3) LEADS OUT 1.5 m SIX (6) LEADS OUT (OPTIONAL)

BEFORE COMMISSIONING, TERMINAL ARRANGEMENT SHALL BE SUCH THAT THE STATOR CONNECTION CABLES ARE COVERED WITH EARTHED PROTECTIVE STRUCTURE (E.G. MAIN TERMINAL BOX AND ADEQUATE INTERMEDIATE BOX).

MAIN TERMINAL BOXES ARE NOT INCLUDED IN MOTOR MANUFACTURER'S DELIVERY.

MAIN TERMINAL BOXES MUST FILL FOLLOWING REQUIREMENTS:
- FOR EXPLOSIVE ENVIRONMENTS EX CERTIFIED
- ENCLOSURE IP55 OR HIGHER ACC. TO SITE CONDITIONS

MAXIMUM MASS FOR MTB ASSEMBLY 600 kg,
MAXIMUM MOMENT FROM MTB ASSEMBLY ACCORDING TO POINT W 1600Nm.

DURING THE INITIAL INSTALLATION PLACE 2 mm SHIMS UNDER THE FEET OF THE MOTOR.
THE CUSTOMER IS RESPONSIBLE FOR THE DESIGN AND CONSTRUCTION OF THE FOUNDATION.
IT SHALL BE SUFFICIENTLY RIGID TO WITHSTAND SHORT CIRCUIT FORCES. TO AVOID RESONANCE VIBRATIONS THE FOUNDATION SHALL BE DESIGNED SO THAT THE NATURAL FREQUENCY OF FOUNDATION TOGETHER WITH MACHINE IS NOT WITHIN ±20% OF RUNNING SPEED FREQUENCY.
THE CUSTOMER IS ALSO RESPONSIBLE FOR LATERAL AND TORSIONAL CRITICAL SPEED ANALYSIS OF THE COMPLETE INSTALLATION.

We reserve all rights in this document and in the information contained therein. Reproduction, use or disclosure to third parties without express authority is strictly forbidden.
© ABB Oy, Electrical Machines, Helsinki

General tolerances ISO 2768-mK
Threads according to ISO 965 toleranceclass 6H
Symbols for roughness acc. to ISO 1302

Rev	Change	Date	Prep.	Approved

Prepared 2006-05-08 A.MATTILA	Responsible dept. ATDM/PID	Title DIMENSION PRINT SQUIRREL CAGE MOTOR	Scale 1:20
Approved 2006-06-21 O.LAHTINEN	Take over dept.		
Material		Code 13 BM 315 A / 315	Language en
Supersedes	Superseded by	Type M3BM/GM 315LK2 B3	Size A3
ABB Oy, Electrical Machines, Helsinki		Document No. 3GZF500031-565 — Revision A	Sheet 1/1