High-Speed Busbar Protection with GOOSE

The well-proven and reliable Ethernet LAN technology and IEC 61850, the global communication standard for power distribution and substation automation, shake hands to introduce a comprehensive technology platform for the development of applications for tomorrow's smart power systems.

Due to its inherent potential the new IEC 61850 standard has gained a firm position, not just in the field of power system automation but also outside its original field of application field. From the number of IEC 61850 based substations already delivered one can expect that the IEC 61850 standard will have the same role as a "lingua franca" and enabler in the field of power system automation as the specification of the html language in the 90's had on the emergence of the Internet web services.

ABB's novel 615 series protection and control devices feature native support for the IEC 61850 standard including the standard's horizontal GOOSE communication (Generic Object Oriented Substation Event). The peer-to-peer communication using GOOSE over a substation-wide switched Ethernet LAN enables sophisticated logic schemes to be introduced for substation protection and automation.

The GOOSE service of the IEC 61650 standard can be used in interlocking-based busbar protection schemes. In this new approach the conventional hard-wired blocking signal paths between the switchgear cubicles are replaced with a substation-wide Ethernet LAN. Other functions that can be implemented using GOOSE messaging include circuit-breaker failure protection, selective arc fault protection, automatic adaptation of the protection system to varying substation and network configurations, control of the arc suppression coil (Petersen coil), and voltage/reactive power control of parallel power transformers.

Fast and reliable busbar protection

By using GOOSE messaging an operational speed gain of about 30% can be achieved by comparison with the operating speed of the classic, interlocking-based busbar protection schemes. The speed advantage is entirely attained from the speed and reliability of the GOOSE service.

Interlocking schemes are a simple, clear and cost-effective way of implementing substation busbar protection in distribution substations. The interlocking principle is particularly suited for short-circuit protection schemes but the same principle can also be applied in earth-fault protection schemes, especially in networks with a directly earthed or a low-resistance earthed neutral.

Fig. 2. ABB's novel feeder protection and control IED unleashes the full potential of IEC 61850, the new global standard for power distribution and substation automation.

REF615 application with GOOSE

Issues affecting the operating time of interlocking-based busbar protection systems

- Not affected by the applied communication technology
- Function gaining speed from GOOSE
- Significant technolgy-related delay
- Delay eliminated in GOOSE application

FACTOR	HARDWIRED APPLICATION	IEC 61850 AND GOOSE
Safety margin allowing for a possible saturation of the current transformers	■	■
Delay originating from possible interposing relay	■	■
Start delay of relay sending out blocking signal / Overcurrent stage sending out GOOSE message	■	■
Retardation time of overcurrent relay providing busbar protection	■	■
Input and blocking circuit delay / Overcurrent stage receiving GOOSE message	■	■
Circuit breaker operating time	■	■

Fig. 1. Comparative table outlining the parametres affecting the speed of interlocking-based busbar protection schemes.

Protection schemes based on interlocking are well-known and widely accepted. When a fault arises on an outgoing feeder the protection relays of both the incoming feeder and the faulty outgoing feeder start. On starting, the relay of the outgoing feeder, however, blocks the fast-acting stage of the relay of the incoming feeder. On the contrary, should a fault arise on the busbar system, the relays of the outgoing feeders will not start and the relay of the incoming feeder is allowed to operate after a short coordination time and trip the CB of the incoming feeder.

By means of new the technology the traditional interlocking scheme can be speeded up considerably. At the same time the new technology offers an increased operational reliability and flexibility of the protection.

By transferring GOOSE messages between the relays interconnected with a local area network (LAN) the blocking signals can be sent directly from relay-to-relay without additional delay from auxiliary relays or input filters. In complex busbar systems the blocking signals have to be routed to several objects. For hardwired schemes this means insertion of auxiliary relays, which adds delay to the blocking circuit. This additional delay must be considered when the total operating time of the protection is determined.

By applying GOOSE messaging blocking signals can be transferred to all the involved relays at once. The relay(s) to be blocked pick(s) up the blocking signal from the message. When using GOOSE messaging the total operating time of the busbar protection is independent of the number of protection relays involved and the complexity of the busbar system.

The operational reliability of a busbar protection scheme based on interlocking and GOOSE messaging is significantly enhanced by the inherent supervision of the GOOSE messaging. Further, the interlocking principle itself incorporates features, which secure operation in fault situations: should the blocking circuit be broken, no blockings will be issued. The broken blocking circuit will not render the protection inoperative but may permit unnecessary tripping. The supervision function of the GOOSE service generates an alert, should the message not get through, allowing appropriate repair measures to be taken immediately.

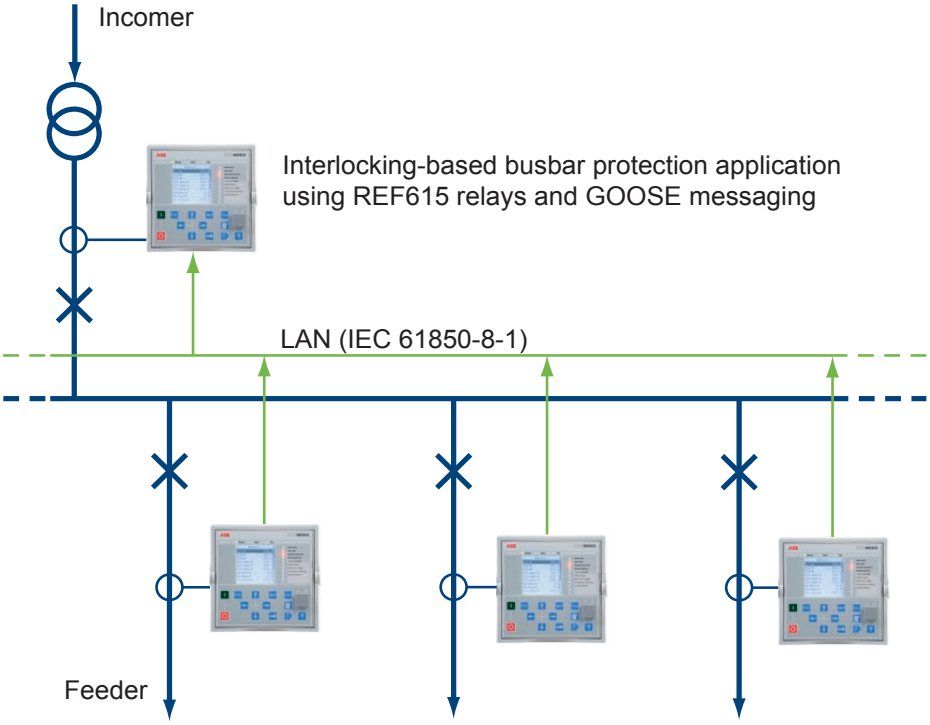

Fig 3. Fast busbar protection scheme based on ABB's new 615 series protection and control IEDs, a station-wide Ethernet LAN and the GOOSE services offered by the new global IEC 61850 standard.

Adaptive and flexible protection

The supervision functionality being part of the GOOSE service can be used for managing the protection in an optimal way. The objects to be protected have different requirements. For some objects maintaining the operating speed of the protection is of primary importance, even at the risk of loosing selectivity. For some other objects maintaining the selectivity of the protection is of vital importance and the operating time can be slightly prolonged to obtain selectivity. By utilizing the supervision function of the GOOSE service the protection functionality to be given preference in a particular application can be managed to obtain the appropriate protection.

Combining GOOSE services with flexible REF615 feeder protection and control IEDs allows the busbar protection to benefit from the multiple protection stages of the IEDs. REF615 contains separate protection stages for the individual protection functions. In this way compromises stemming from conflicting requirements on a certain stage can be avoided when determining setting values for the protection functions. These circumstances are particularly beneficial in busbar protection applications based on interlocking. The settings of the relay stage issuing blocking signals can be freely determined from the magnitude of the short-circuit current, switching inrush current and the starting current of the feeder. The reach

of the protection stage in a fault situation does not need to be considered when the protection settings are determined. Generally, the reach of the protection has had to be considered. Correspondingly, the settings of the protection stage initiating the busbar protection can be determined from of the short-circuit current of the network and, on the other hand, from the currents appearing under exceptional network conditions. These features make interlocking schemes a useful and effective means of implementing high-speed busbar protection in distribution substations.

Highlights of high-speed busbar protection with GOOSE

- Extremely fast messaging using GOOSE
- Increased operating reliability of the protection through continuous supervision of the communication and the data integrity of the GOOSE messages
- Flexible protection schemes through software configuration rather than hardwired signal paths
- Adaptive protection system to changing substation configurations and network topologies
- Easily extendable and on demand reconfigurable substation protection system
- Cost-efficient solutions, as hardwired signal paths are replaced by a LAN network.

Olli Rintamaki

Product Manager

ABB Oy, Distribution Automation
FI-65101 VAASA, Finland

For more information, please contact Mr. Allan Orn on email: marketing.communications@fi.abb.com

ABB Oy, Distribution Automation
P.O.B 699
65101 VAASA, FINLAND
http://www.abb.com/substationautomation/