Technical specification

Model 9C41300E000001M00
MRP code 68881463

Motor parameters

Continuous stall torque	Mo	1	4.3	Nm
Peak stall torque	Mmax	2	12.9	Nm
Rated torque	Mn @ nN	1	3.9	Nm
Rated speed	nN		3000	rpm
Rated frequency	fN		250	Hz
Number of motor poles	p		10	

Winding specifications

Torque constant	KTo_cold	2-3-5	1.65	Nm/A
Voltage constant	KE	2-3-4	0.95	Vs/rad
Resistance betwenn phases [Ω]	R	2-3	8.53	Ohm
Inductance between phases [mH]	L	6	43.0	mH
Continuous current @ Mo	Io	1-5	3.0	A
Current @ Mmax	Imax	2-5	9.8	A
Rated current @ Mn	In	1-5	2.8	A
Bemf between phases @ nN	Ephph	2-3-4	300	V

Mechanical parameters

Moment of inertia of rotor	JM	7	4.0	$kg.cm^2$
Mass of the motor	M	7	4.1	kg
Protection degree (body only)	-		IP65	

Notes:

1) Average motor windings over temperature 100℃, ambient temperature 40℃, flange mounted (300x300x20 steel)
2) All motor parts at 20℃
3) Tolerance +/-10%
4) Vrms between phases
5) Arms
6) Tolerance +/-15%
7) Motor without brake

All values have been calculated

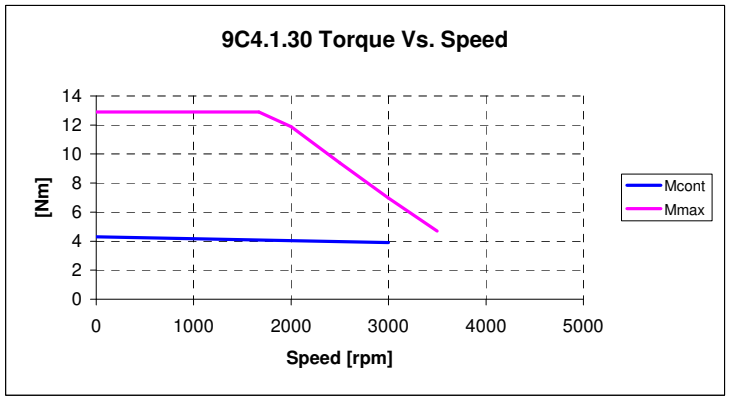

Notes:

DC bus voltage: 565 Vdc (AC 400 V supply)

Max torque curve may depend on actual DC bus voltage.

Transducer type

Endat EQN 1325, 1Vpp, 512 ppr
Sin/Cos Nr.: 512
Interface: EnDat
Rev. Count Bits: 12
Pos. Count Bits: 13

Motor overall dimensions on next page
See motor quick guide for additional information on installation, connections and tranducers.

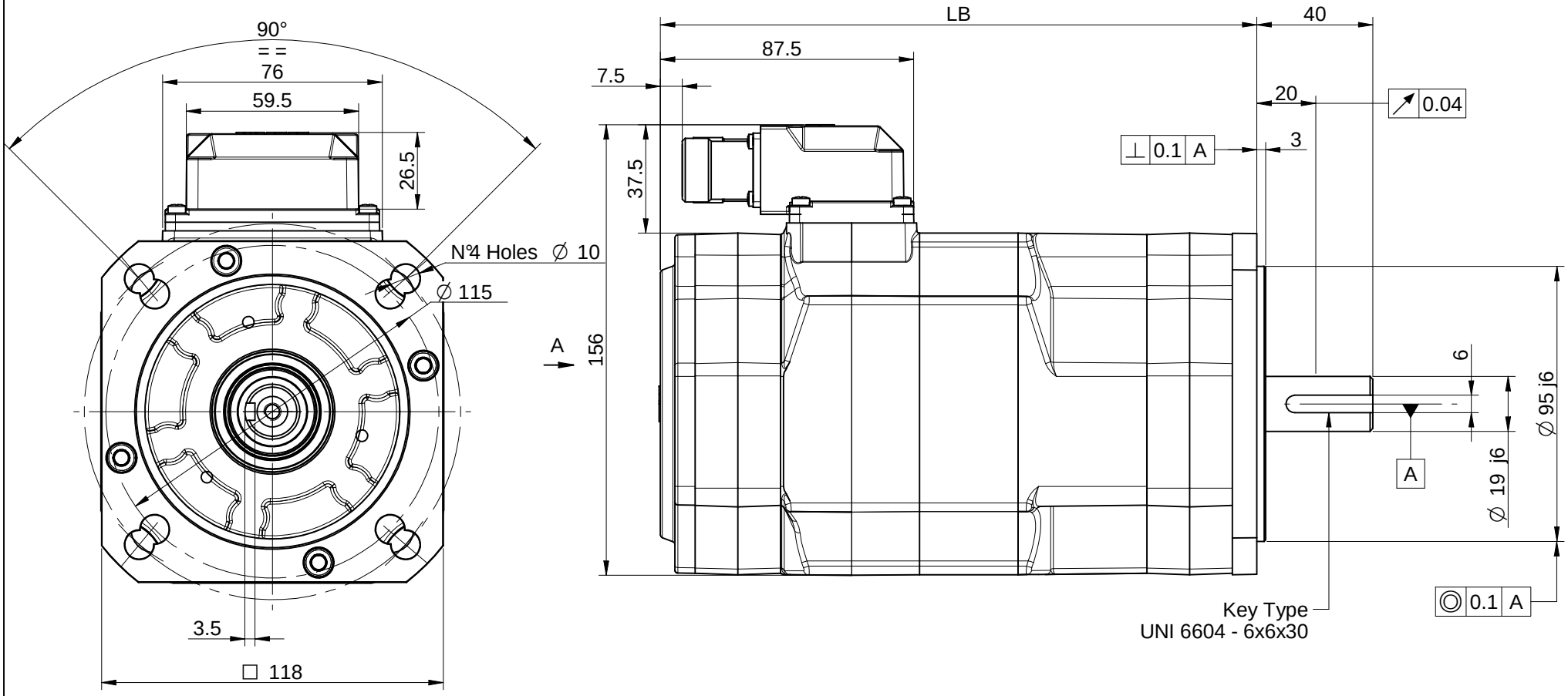

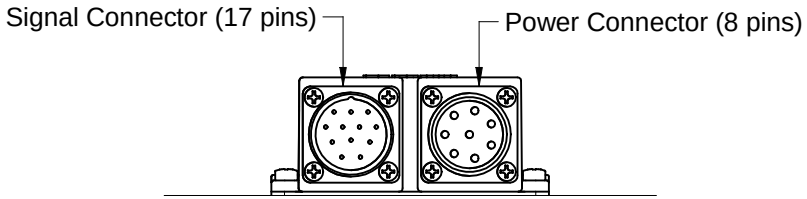

View A

NOTES:
1) This drawing refers to 9C4.1 motor equipped with brake and encoder.
2) Dimensions may be subject to changes.
3) All motors balanced with half-key, full key in package.

Motor Sizes				
TYPE	LB RESOLVER	LB ENCODER	LB Brake	LB Brake + ENCODER
9C4.1	147	176,5	176,5	206
9C4.2	181	210,5	210,5	240
9C4.3	215	244,5	244,5	274
9C4.4	249	278,5	278,5	308

(A) 2008-09-26 - Modified dimensions in lenght table, updated drawing

MODIFICHE

ABB S.p.A.

QUOTE SENZA INDICAZIONE DI TOLLERANZA
GRADO DI PRECISIONE SECONDO UNI 5307-63
GROSSOLANO / MEDIO / PRECISO

DENOMINAZIONE: **9C4 Motor Overall Dimensions**

File : 1526050a - Ingombro 9C4 - Finland.dft

CODICE

MATERIALE

PROTEZ. SUPERFICIALE: –

PESO: –.–

LAVORAZIONI

SCALA: 1:1

DATA: 22/10/2007

DISEGN.: PGS

CONTROLL.: Ing. Secondo

SERIE: 9C4

DISEGNO NR.: 15.26050

ABB S.p.A. proprietaria di questo disegno, ne vieta la comunicazione a terzi e la diffusione non autorizzata