We reserve all rights in this document and in the information contained therein. Reproduction, use or disclosure to third parties without express authority is strictly forbidden. Copr. ABB Automation

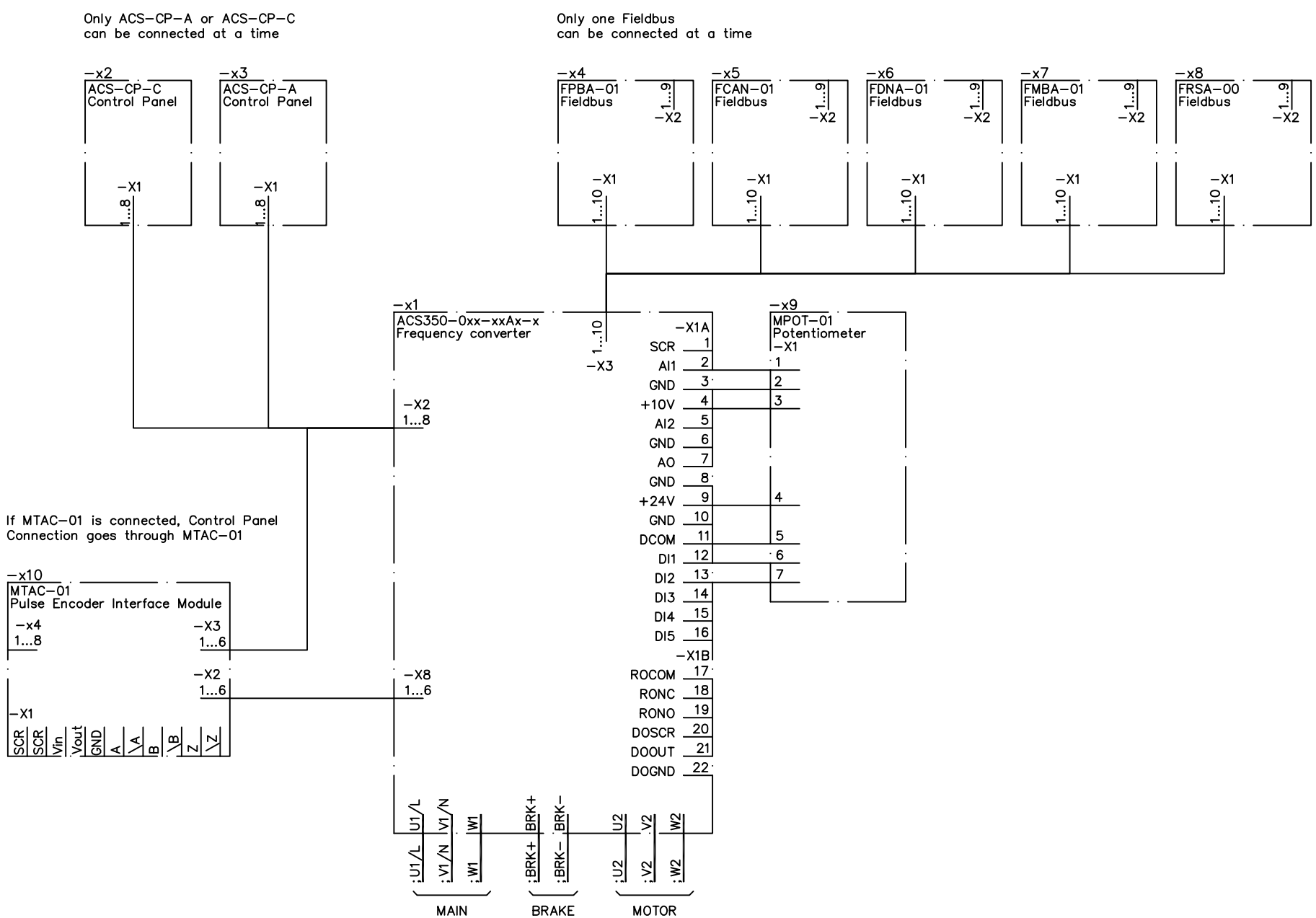

MANDARIN: \CI_DIA\1.DWG

Cust. Doc. No.	Prepared 31.10.2005 Drufva Tomi	Title ACS350-0xx-xxAx-x	Product Circuit diagram EFS2	Item des. =ACS350
Customer	Approved 31.10.2005 VIROPANU		Resp.dept.	Rev.ind. A / Lang.
	Project		Doc. No. 3AFE 6863 8305	Sheet 1 / Cont. –
ABB Ref. No.		ABB		