Rev Ind	Revision	Appd	Date
2	Updated	MG	05 08

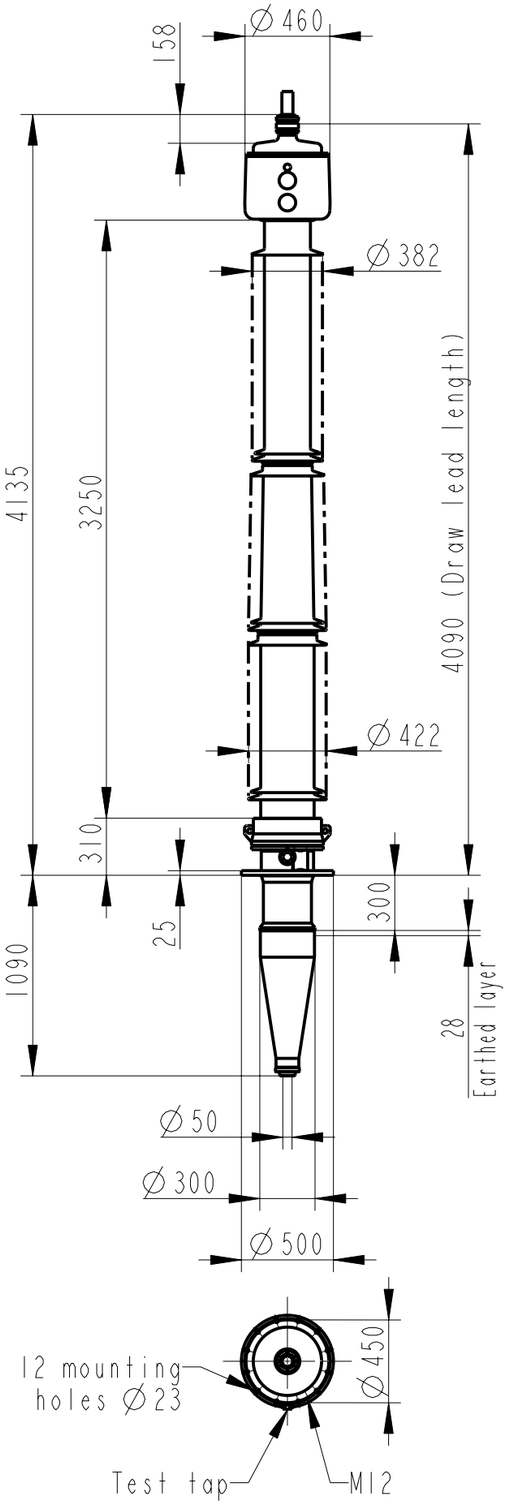

Bushing Data:

Rated Voltage	420	kV
Phase to-earth Voltage	243	kV
Dry Lightning Impulse 1,2/50µs	1425	kV
Wet Switching Impulse	1050	kV
Wet Power frequence AC	690	kV
Routine test 1min dry 50Hz	690	kV
Rated Current	1600	A
Creepage Distance Nominal	11750	mm
Creepage Distance Minimum	11400	mm
Mass	750	kg

Ordering Data:

BUSHING	COLOUR AIR INSULATOR
LF121 570 -B / -AB	Brown / Light Grey

DRAW ROD SYSTEM

LF170 097	UPPER DRAW ROD
LF170 098	LOWER DRAW ROD

OUTER TERMINAL	Material	D2 (mm)
LF170 090-A	Al	Ø30
LF170 090-B	Al	Ø60
LF170 090-C	Cu	Ø30
LF170 090-D	Cu	Ø40
LF170 090-E	Cu	Ø60

INNER TERMINAL	D3 (mm)	Cond.area (mm^2)
LF170 091-A	Undrilled with pilot hole Ø5	
LF170 091-B	Ø15	up to 95
LF170 091-C	Ø30	up to 285
LF170 091-D	Ø42	up to 740

END SHIELD	
LF170 092-K	Epoxy insulated
LF170 092-L	Insulated with 3mm pressboard

ABB Ludvika, Sweden

No.

Um/Uy		kV	Ir		A	50/60 Hz
LI	kV	SI		kV	AC	kV
M	kg	L		mm	D	
C1		pF	Tan δ		z	
C2		pF	Tan δ		z	

Signatures acc. to revision 2 are valid
Signaturer enligt revision 2 gäller

INNER TERMINAL / OUTER TERMINAL

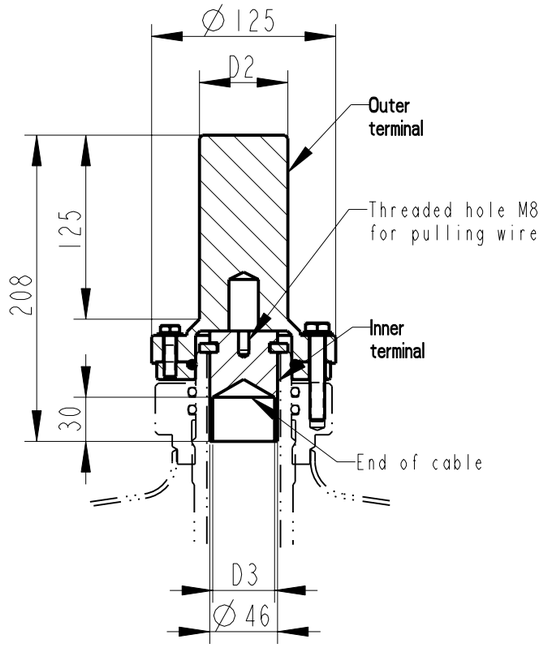

END SHIELD

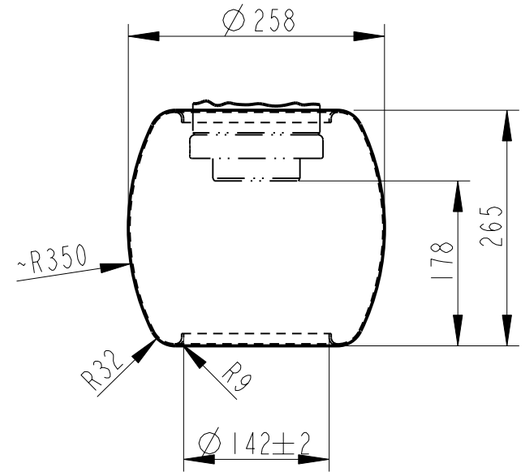

DRAW ROD SYSTEM / OUTER TERMINAL

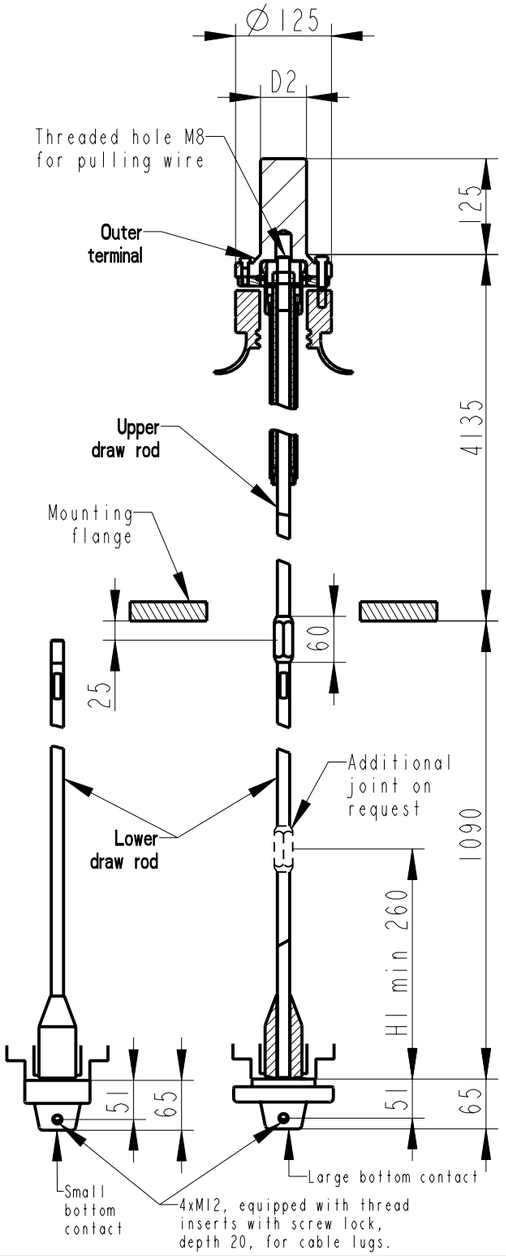

Based on	Reg. No.	Title	
Prepared: M Gullo 05 08	Responsible department: PTPR/CO/BLK	GOE(2)-1425-1050-1600-0.3	
Approved: R Johansson	Take over department		Language: EN
Design engineering review: M Carlsson	Database		Page: 1(1)
ABB		Document No. 2751400-4	

We reserve all rights in this document and in the information contained therein. Reproduction, use or disclosure to third parties without express authority is strictly forbidden. ©ABB