| Rev Ind | Revision | Appd | Date |
|---|---|---|---|
| | | | |

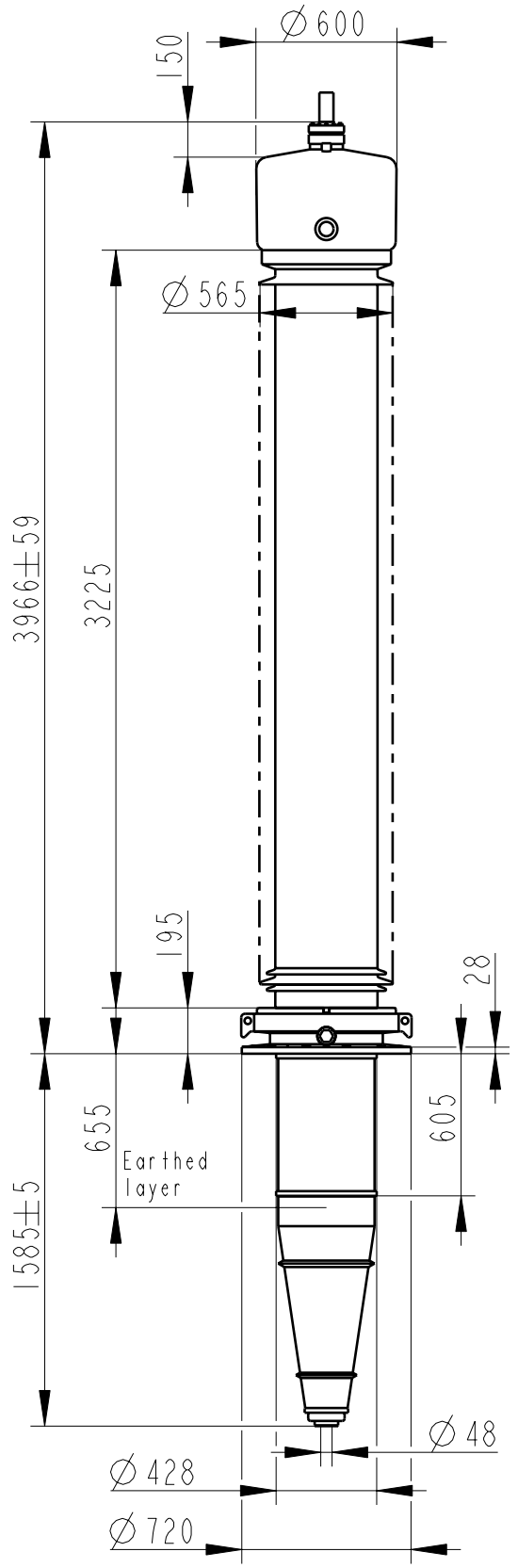


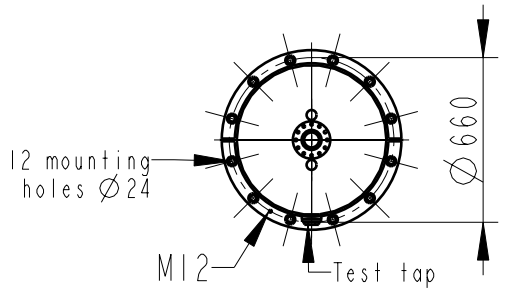


## Bushing Data:

| | | |
|---|---|---|
| Rated Voltage | 550 | kV |
| Phase to-earth Voltage | 318 | kV |
| Dry Lightning Impulse 1,2/50µs | 1550 | kV |
| Wet Switching Impulse | 1050 | kV |
| Wet Power frequence AC | 660 | kV |
| Routine test 1min dry 50Hz | 750 | kV |
| Rated Current | 2500 | A |
| Creepage Distance | 10130 | mm |
| Mass | 1455 | kg |

## Ordering Data:

**BUSHING** COLOUR AIR INSULATOR
LF121072 -A / -AA BROWN / LIGHT GREY

**OUTER TERMINAL**

| | H2 (mm) | D2 (mm) |
|---|---|---|
| LF170 073-A Al | 125 | 60 |
| LF170 073-B Cu | 125 | 60 |
| LF170 073-G Cu/Ag | 125 | 60 |

OTHER TYPES ON REQUEST

**END-SHIELD**
LF170 046-V EPOXY INSULATED
LF170 046-VP INSULATED WITH 3 mm PRESSBOARD

**DRAW ROD SYSTEM**
LF170 059 LOWER DRAW ROD WITH N1=4 OR N1=6
LF170 057 UPPER DRAW ROD

**INNER TERMINAL**

| | D3 (mm) | D9 (mm) | Cond.area (mm2) | Current (A) IEC | IEEE |
|---|---|---|---|---|---|
| LF170 056-E | 0 *) | 45 | - | - | - |
| LF170 056-D | 40 | 45 | 600 | 1600 | 1360 |

*) WITH PILOT HOLE D=5

**ABB Components** Ludvika, Sweden

No.
Ur/Uy kV Ir A 50/60 Hz
LI kV SI kV AC kV
M kg L mm D
C1 pF Tanδ %
C2 pF Tanδ %

## INNER TERMINAL / OUTER TERMINAL

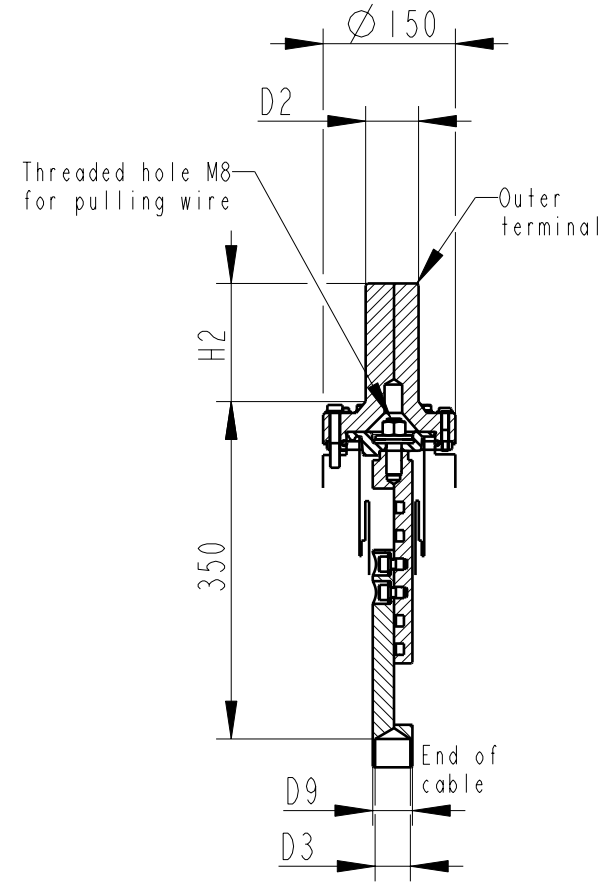


## END SHIELD

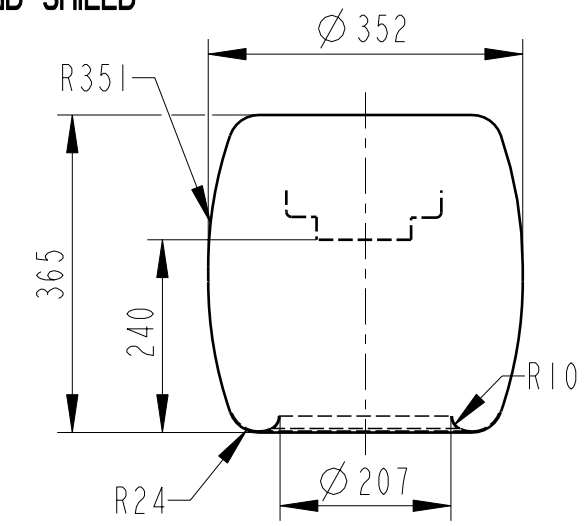


## DRAW ROD SYSTEM / OUTER TERMINAL

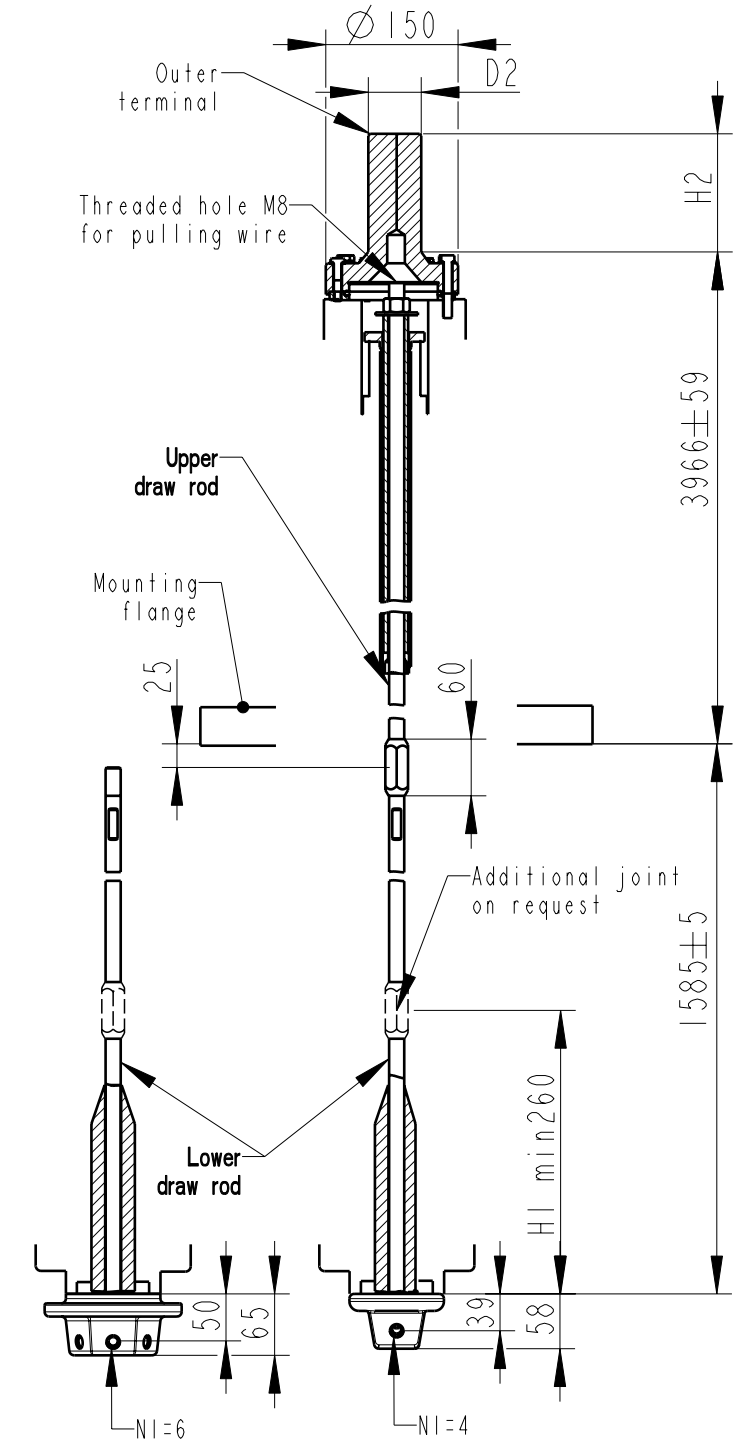


N1=Number of holes M12, equipped with thread insert with screw lock, depth 20, for cable lugs.

| | | | |
|---|---|---|---|
| Based on | Reg. No. | Title | |
| Prepared: Lövnord | Responsible department: COM/BK 0022 | GOE 1550-1050-2500-0.6 | |
| Approved: Johansson | Take over department | | Language: 82 |
| Design engineering review: Gutman | Database | | Page: 1(1) |
| ABB Components | | Document No. 2751369-33 | |

We reserve all rights in this document and in the information contained therein. Reproduction, use or disclosure to third parties without express authority is strictly forbidden. ©ABB