Rev. Ind	Revision	Appd	Date
1	Redrawn	LOS	9844

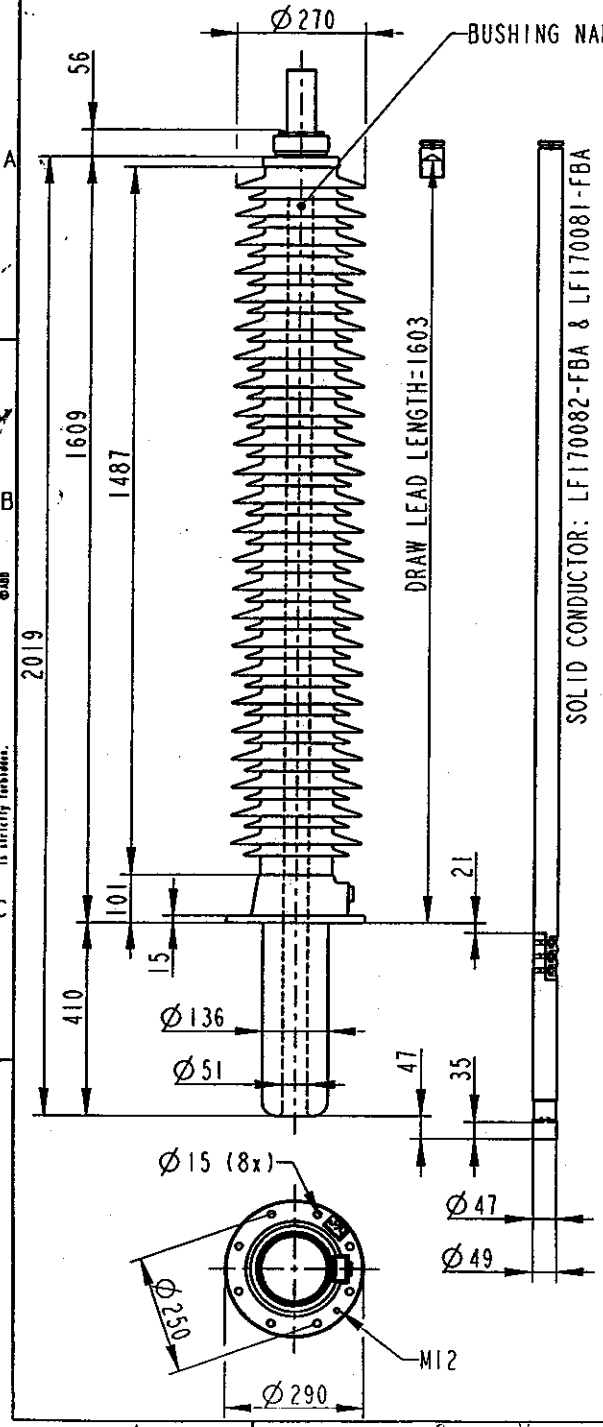

INNER TERMINAL		
Catalogue No	D.cable	MASS
LF170080-A	5	1
LF170080-B	11	1
LF170080-C	13	1
LF170080-D	15	1
LF170080-E	18	1
LF170080-F	30	1
LF170080-G	42	1
LF170080-H	45	1

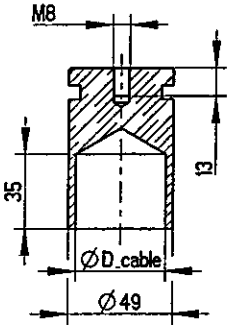

OUTER TERMINAL				
Catalogue No	MATERIAL	MASS	H2	D.STUD
LF170079-A	AL	2.3	125	60
LF170079-B	AL	1.6	125	30
LF170079-C	CU	6.2	125	60
LF170079-D	CU	3.6	125	30
LF170079-E	CU/SN	6.2	125	60
LF170079-F	CU/SN	3.6	125	30
LF170079-G	CU/AG	6.2	125	60
LF170079-H	CU/AG	3.6	125	30

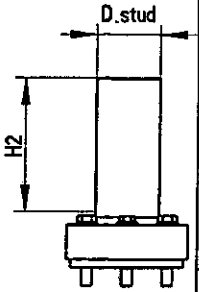

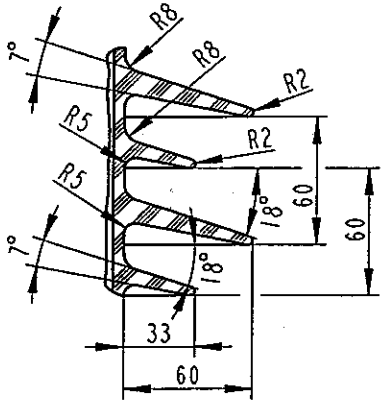

ELECTRICAL DATA, according to IEC 137		
Ratings	Rated voltage	170 kV
	Max phase to earth voltage, temporary	170 kV
	Max current with Cu-conductor	1600 A
	Max current with stranded cable 740 mm²	1000 A
	Dry lightning impulse	750 kV
	Wet power frequency	325 kV
Routine test	Dry power frequency	365 kV
Capacitance	Nominal capacitance	282 pF

GENERAL DATA, according to IEC 137		
Silicone rubber insulator	Creepage distance	5504 mm
	Protected creepage distance	2400 mm
	Colour	GREY RAL 7035
Mass	Mass bushing	61 kg
Cantilever load	Cantilever test load, heavy load	4000 N
	Max cantilever operating load, bushing	2000 N
Temp class	Temperature class	CLASS 2
Mounting and service instructions		2750 515-115

ELECTRICAL DATA according to ANSI C57.19.00		
Ratings	Insulation class	161 kV
	Rated max. line to ground voltage	102 kV
	Max current with Cu-conductor	1600 A
	Max current with stranded cable 740 mm²	1000 A
Dim. requirements acc. to C57.19.01 not fulfilled.		

ABB Components Ludvika, Sweden

GSA170-OA/1600/0 LF130170-BA

No.

Um/Uy 170/170 kV Ir 1600 A 50/60 Hz

LI / SI / AC 750 / - / 365 kV

M 61 kg L 410 mm V 0-90

C1 pF Tan δ %

C2 pF Tan δ %

Signatures acc. to Revision 0 are valid Signaturer enligt Revision 0 gäller	Based on	Reg. No.	Title: OIL-AIR BUSHING GSA170-OA/1600/0
Production engineering review: ÅSMO	Prepared: LINUSSON	Responsible department: COM/BKU 96 44	Language: 82
Inspection engineering review: JOHANSSON	Approved: JACOBSON	Take over department	Page: 1(1)
Design engineering review: PETRICI	Revision	Database	
ABB Components			Document No. 2751362-FBA

We reserve all rights in this document and in the information contained therein. Reproduction, use or disclosure to third parties without express authority is strictly forbidden. ©ABB