Rev Ind	Revision	Appd	Date

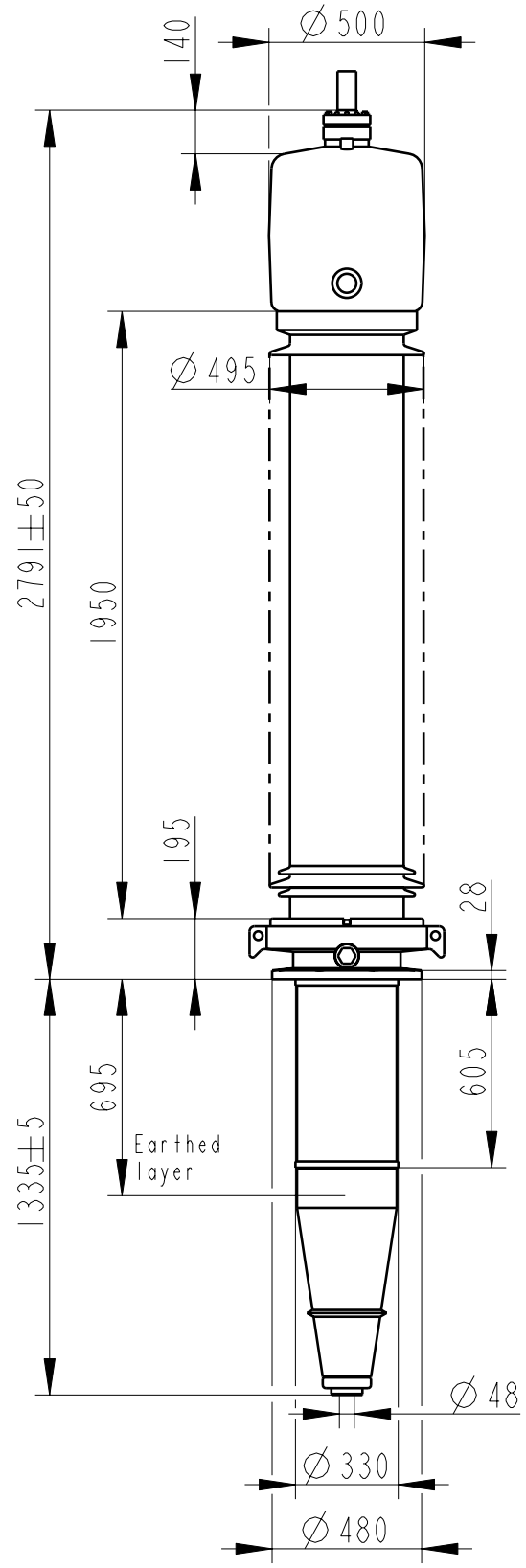

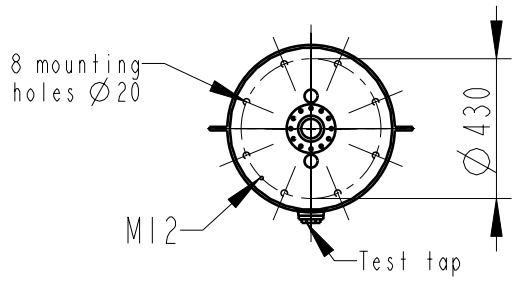

Bushing Data:

Rated Voltage	362	kV
Phase to-earth Voltage	220	kV
Dry Lightning Impulse 1,2/50µs	950	kV
Wet Switching Impulse	700	kV
Wet Power frequence AC	425	kV
Routine test 1min dry 50Hz	435	kV
Rated Current	2500	A
Creepage Distance	6245	mm
Mass	710	kg

Ordering Data:

BUSHING COLOUR AIR INSULATOR
LF121062 -A / -AA BROWN / LIGHT GREY

OUTER TERMINAL

	H2 (mm)	D2 (mm)
LF170 073-A Al	125	60
LF170 073-B Cu	125	60
LF170 073-G Cu/Ag	125	60

OTHER TYPES ON REQUEST

END-SHIELD
LF170 046-U EPOXY INSULATED
LF170 046-UP INSULATED WITH 3 mm PRESSBOARD

DRAW ROD SYSTEM
LF170 059 LOWER DRAW ROD WITH N1=4 OR N1=6
LF170 057 UPPER DRAW ROD

INNER TERMINAL

	D3 (mm)	D9 (mm)	Cond.area (mm2)	Current (A) IEC	IEEE
LF170 056-E	0 *)	45	-	-	-
LF170 056-D	40	45	600	1600	1360

*) WITH PILOT HOLE D=5

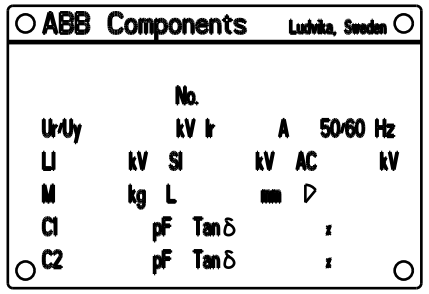

INNER TERMINAL / OUTER TERMINAL

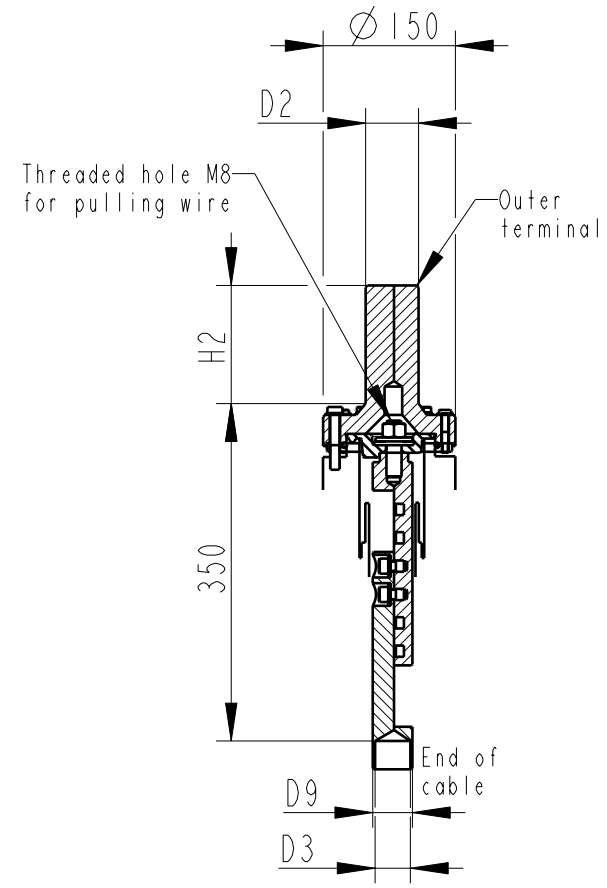

END SHIELD

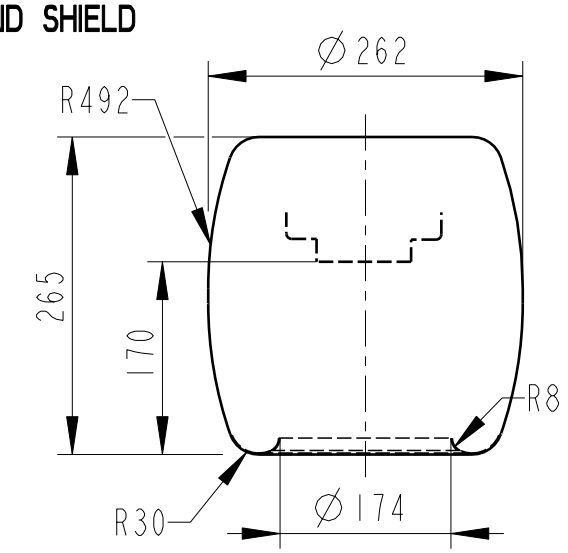

DRAW ROD SYSTEM / OUTER TERMINAL

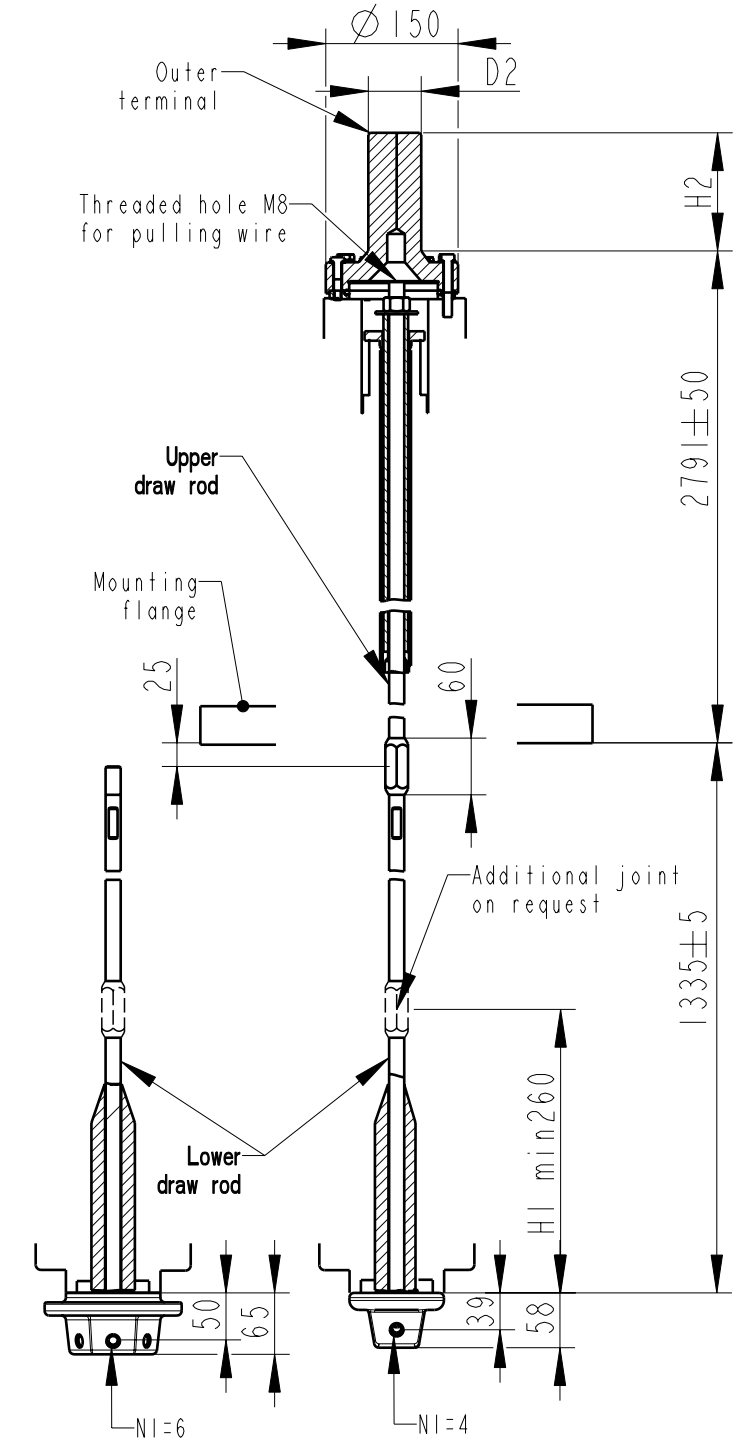

N1=Number of holes M12, equipped with thread insert with screw lock, depth 20, for cable lugs.

We reserve all rights in this document and in the information contained therein. Reproduction, use or disclosure to third parties is strictly forbidden. ©ABB

Based on	Reg. No.	Title	
Prepared: Lövnord	Responsible department: COM/BK 0022	GOE-950-700-2500-0.6	
Approved: Johansson	Take over department		Language: 82
Design engineering review: Gutman	Database		Page: 1(1)
ABB Components		Document No. 2751369-88	