Rev. Ind	Revision	Appd	Date
I	Redrawn	LOS LoS	9844

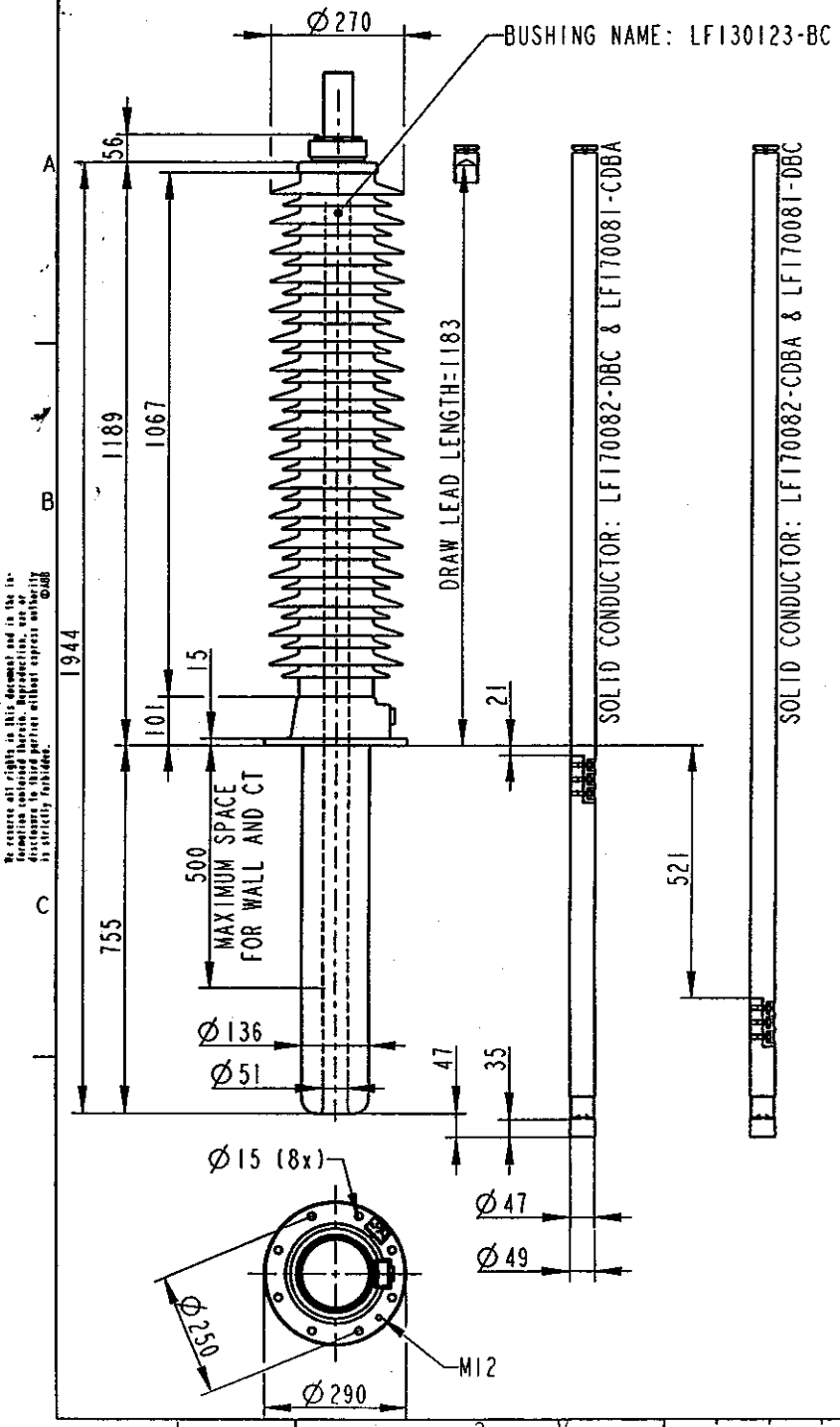

INNER TERMINAL		
Catalogue No	D.cable	MASS
LF170080-A	5	1
LF170080-B	11	1
LF170080-C	13	1
LF170080-D	15	1
LF170080-E	18	1
LF170080-F	30	1
LF170080-G	42	1
LF170080-H	45	1

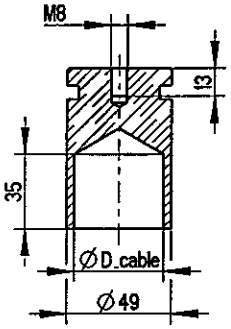

OUTER TERMINAL				
Catalogue No	MATERIAL	MASS	H2	D.STUD
LF170079-A	AL	2.3	125	60
LF170079-B	AL	1.6	125	30
LF170079-C	CU	6.2	125	60
LF170079-D	CU	3.6	125	30
LF170079-E	CU/SN	6.2	125	60
LF170079-F	CU/SN	3.6	125	30
LF170079-G	CU/AG	6.2	125	60
LF170079-H	CU/AG	3.6	125	30

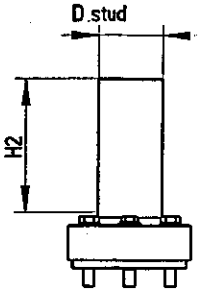

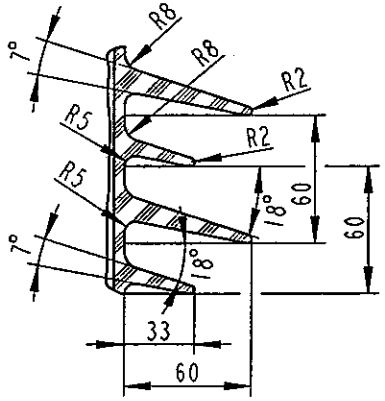

ELECTRICAL DATA, according to IEC 137		
Ratings	Rated voltage	170 kV
	Max phase to earth voltage, temporary	170 kV
	Max current with Cu-conductor	1600 A
	Max current with stranded cable 740 mm^2	1000 A
	Dry lightning impulse	550 kV
	Wet power frequency	230 kV
Routine test	Dry power frequency	260 kV
Capacitance	Nominal capacitance	356 pF

GENERAL DATA, according to IEC 137		
Silicone rubber insulator	Creepage distance	3913 mm
	Protected creepage distance	1700 mm
	Colour	GREY RAL 7035
Mass	Mass bushing	53 kg
Cantilever load	Cantilever test load, heavy load	4000 N
	Max cantilever operating load, bushing	2000 N
Temp class	Temperature class	CLASS 2
Mounting and service instructions		2750 515-115

ELECTRICAL DATA according to ANSI C57.19.00		
Ratings	Insulation class	115 kV
	Rated max. line to ground voltage	88 kV
	Max current with Cu-conductor	1600 A
	Max current with stranded cable 740 mm^2	1000 A
Dim. requirements acc. to C57.19.01 not fulfilled.		

ABB Components Ludvika, Sweden

GSA123-OA/1600/0.5 LF130123-BC

No.

Ur/Uy 170/170 kV f 1600 A 50/60 Hz

LI / SI / AC 550 / - / 260 kV

M 53 kg L 755 mm V 0-90

C1 pF Tan δ %

C2 pF Tan δ %

Signatures acc. to Revision 0 are valid
Signaturer enligt Revision 0 gäller

Based on		Reg. No.	
Prepared	LINUSSON	Responsible department	COM/BKU 96 44
Production engineering review	ÅSMO	Approved	JACOBSON
Take over department		Inspection engineering review	JOHANSSON
Revision		Database	
Design engineering review	PETRICI		

Title: OIL-AIR BUSHING GSA123-OA/1600/0.5

Language: 82

Page: 1(1)

ABB Components

Document No. 2751362-DBC

We reserve all rights in this document and in the information contained therein. Reproduction, use or disclosure to third parties without express authority is strictly forbidden. ©ABB