Rev Ind	Revision	Appd	Date
I	Redrawn for ProE New current ref IZSE...	MC MG	05 20

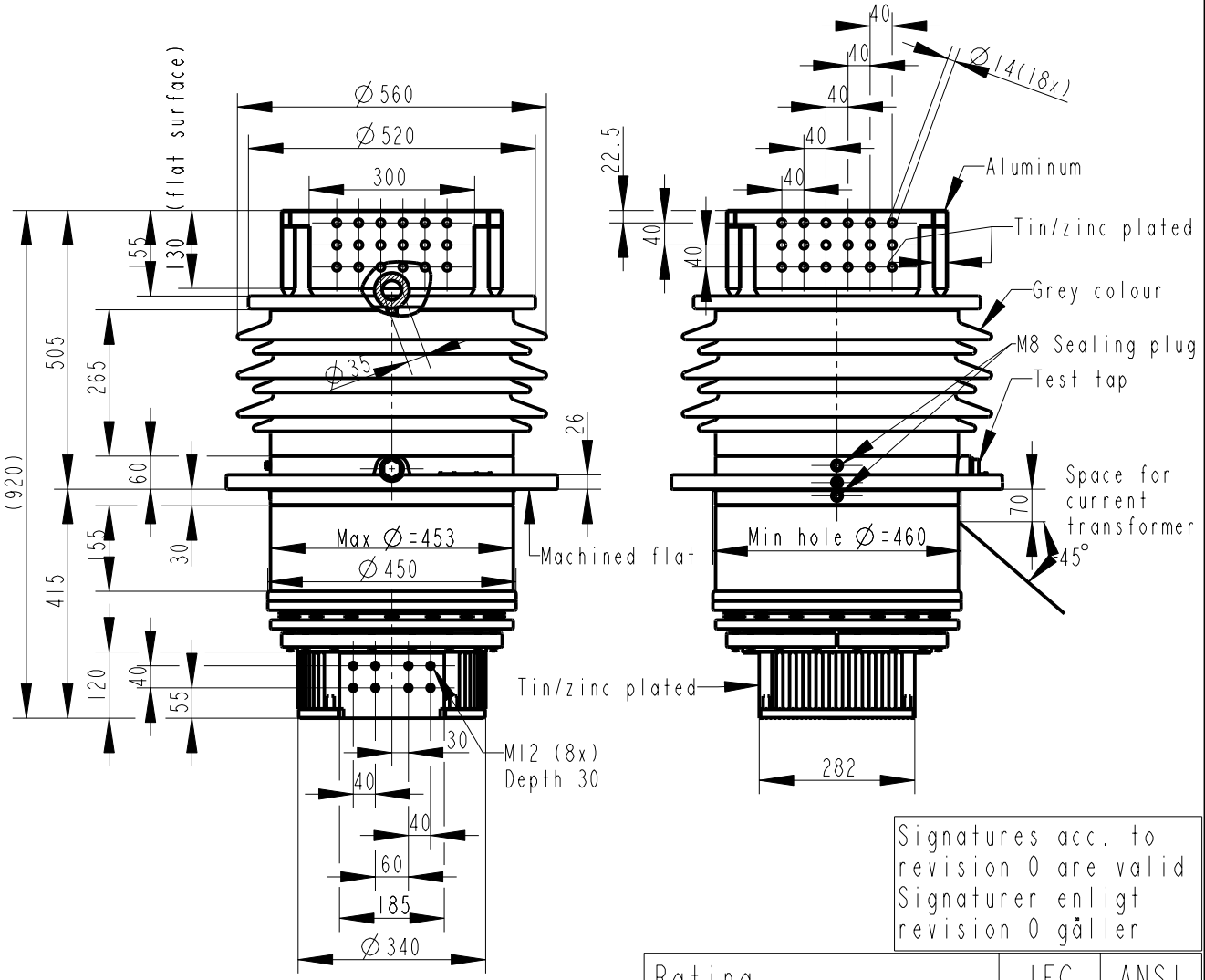

Signatures acc. to revision 0 are valid
Signaturer enligt revision 0 gäller

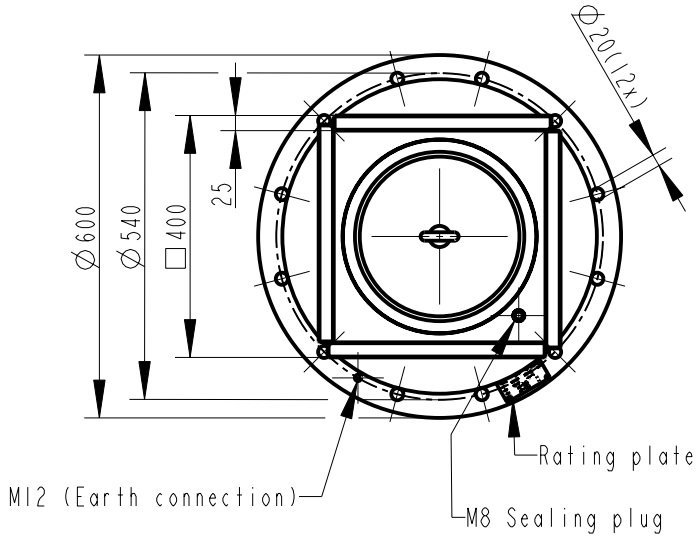

Rating	IEC	ANSI
Rated voltage (kV)	36	-
Phase to ground max. (kV)	36	22
Power frequency wet (kV)	70	75
Power frequency dry (kV)	70	80
Lightning impulse (kV)	170	200
Insulation class (kV)	-	34.5
Current carrying capacity acc to IZSE2750-107		
Creepage distance 760 mm		
Mass 280 kg		
Catalogue number LF126009-B		

We reserve all rights in this document and in the information contained therein. Reproduction, use or disclosure to third parties without express authority is strictly forbidden. ABB

Production engineering review

Inspection engineering review

Design engineering review

Heyman

Based on	Reg. No.	Title	
Prepared Jansson	Responsible department COM/BK 91 48	**Bushing GOH 170-25** **Genomföring GOH 170-25**	
Approved Holmström	Take over department		Language 82
Revision	Database		Page 1(1)
ABB		Document No. 2751312-20	