Rev. Ind	Revision	Appd	Date
1	Redrawn	LOSLos	9844

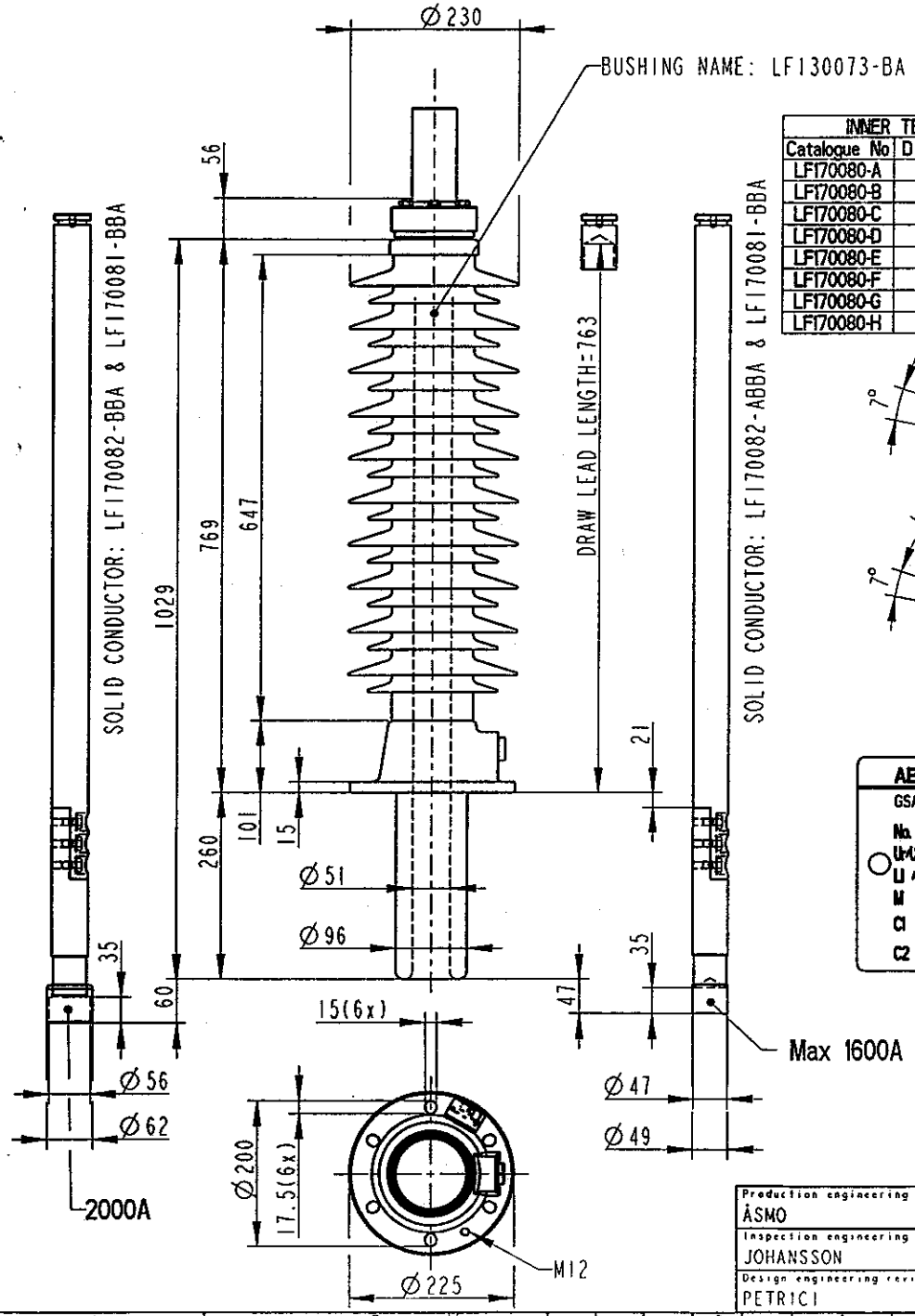

INNER TERMINAL		
Catalogue No	D.cable	MASS
LF170080-A	5	1
LF170080-B	11	1
LF170080-C	13	1
LF170080-D	15	1
LF170080-E	18	1
LF170080-F	30	1
LF170080-G	42	1
LF170080-H	45	1

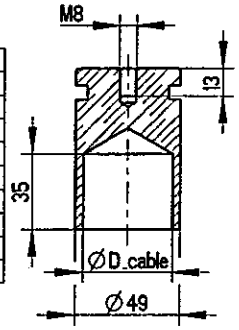

OUTER TERMINAL				
Catalogue No	MATERIAL	MASS	H2	D.STUD
LF170079-A	AL	2.3	125	60
LF170079-B	AL	1.6	125	30
LF170079-C	CU	6.2	125	60
LF170079-D	CU	3.6	125	30
LF170079-E	CU/SN	6.2	125	60
LF170079-F	CU/SN	3.6	125	30
LF170079-G	CU/AG	6.2	125	60
LF170079-H	CU/AG	3.6	125	30

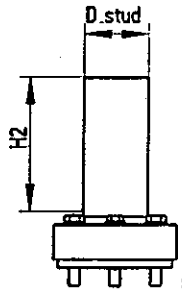

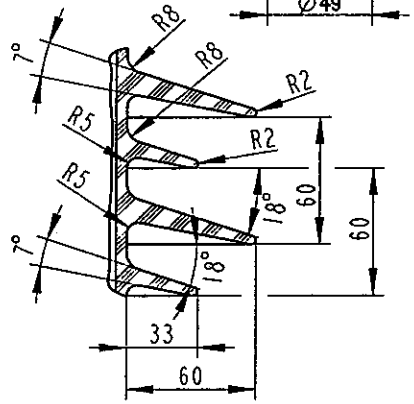

ELECTRICAL DATA, according to IEC 137		
Ratings	Rated voltage	73 kV
	Max phase to earth voltage, temporary	73 kV
	Max current with Cu-conductor	2000 A
	Max current with stranded cable 740 mm^2	1000 A
	Dry lightning impulse	350 kV
	Wet power frequency	140 kV
Routine test	Dry power frequency	160 kV
Capacitance	Nominal capacitance	316 pF

GENERAL DATA, according to IEC 137		
Silicone rubber insulator	Creepage distance	2323 mm
	Protected creepage distance	1000 mm
	Colour	GREY RAL 7035
Mass	Mass bushing	18 kg
Cantilever load	Cantilever test load, heavy load	3150 N
	Max cantilever operating load, bushing	1575 N
Temp class	Temperature class	CLASS 2
Mounting and service instructions		2750 515-115

ELECTRICAL DATA according to ANSI C57.19.00		
Ratings	Insulation class	69 kV
	Rated max. line to ground voltage	44 kV
	Max current with Cu-conductor	2000 A
	Max current with stranded cable 740 mm^2	1000 A
Dim. requirements acc. to C57.19.01 not fulfilled.		

ABB Components Ludvika, Sweden
GSA73-OA/2000/0 LF130073-BA
No.
Ur-Uy 73/73 kV Ir 2000 A 50/60 Hz
LI / SI / AC 350 / - / 160 kV
M 18 kg L 260 mm V 0-90
C1 pF Tan δ %
C2 pF Tan δ %

Signatures acc. to Revision 0 are valid
Signaturer enligt Revision 0 gäller

Based on		Reg. No.	Title: OIL-AIR BUSHING GSA73-OA/2000/0
Prepared: LINUSSON		Responsible department: COM/BKU 96 44	
Production engineering review: ÅSMO	Approved: JACOBSON	Take over department	Language: 82
Inspection engineering review: JOHANSSON	Revision	Database	Page: 1(1)
Design engineering review: PETRICI	ABB Components	Document No.	2751362-BBA

We reserve all rights in this document and in the information contained therein. Reproduction, use or disclosure to third parties without express authority is strictly forbidden. ©ABB