Rev Ind	Revision	Appd	Date
3	Outer terminal -AAD: D2 was 60	PR PR	071227

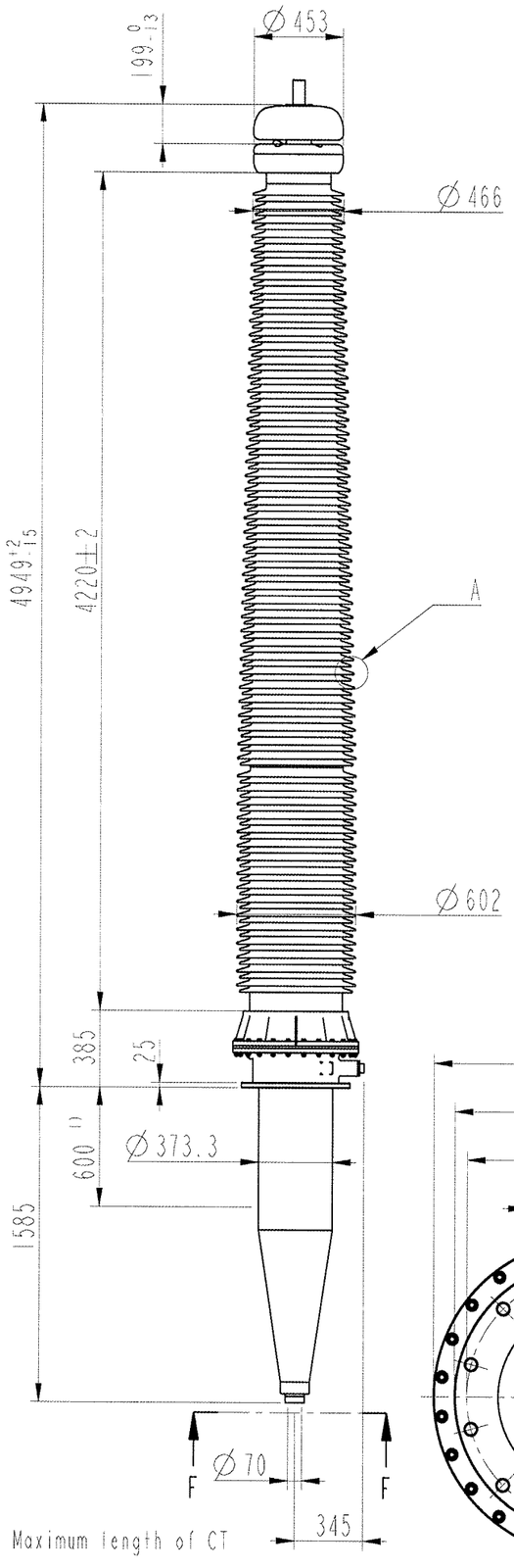

1) Maximum length of CT

Bushing Data:

Rated Voltage	550	kV
Phase to-earth Voltage	318	kV
Dry Lightning Impulse 1,2/50µs	1675/1800	kV
Wet Switching Impulse	1300	kV
Wet Power frequence AC	n.a.	kV
Routine test 1min dry 50Hz	750	kV
Rated Current	1250	A
Creepage Distance, nominal	15519	mm
Creepage Distance, minimum	15125	mm
Mass	1710	kg

Ordering Data:

BUSHING	BIL:1675kV	BIL:1800kV		AIR INSULATOR COLOUR/TYPE
1ZSC901550	-AAB	-DAB	Test tap	Brown/Porcelain
1ZSC901550	-ABB	-DBB	Voltage tap 6kV	Brown/Porcelain
1ZSC901550	-BAB	-EAB	Test tap	Light grey/Porcelain
1ZSC901550	-BBB	-EBB	Voltage tap 6kV	Light grey/Porcelain

OUTER TERMINAL	MATERIAL	D2 (mm)
1ZSC999001-AAA	Al	30
1ZSC999001-AAB	Al	60
1ZSC999001-AAC	Cu	30
1ZSC999001-AAD	Cu	40

DRAW ROD SYSTEM	
1ZSC999006	Lower draw rod
1ZSC999007	Upper draw rod

INNER TERMINAL	D3 (mm)
1ZSC999005-AAA	15
1ZSC999005-AAB	30
1ZSC999005-AAC	40
1ZSC999005-AAD	42

FIXED BOTTOM CONTACT
1ZSC999002-AAA

END SHIELD	
1ZSC999003-AAA	Epoxy insulated
1ZSC999003-AAB	Pressboard insulated

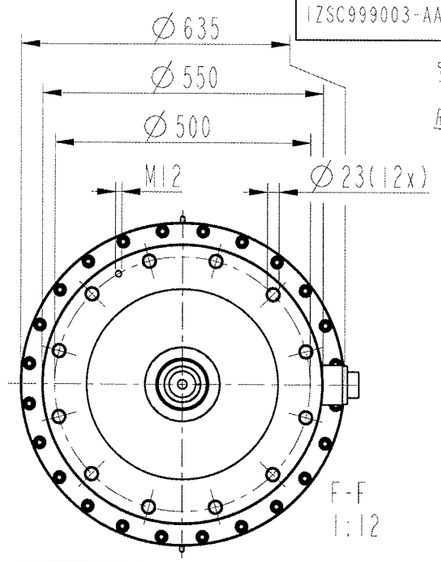

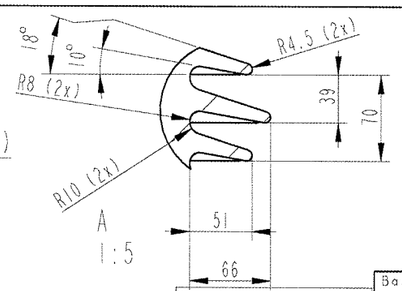

INNER TERMINAL

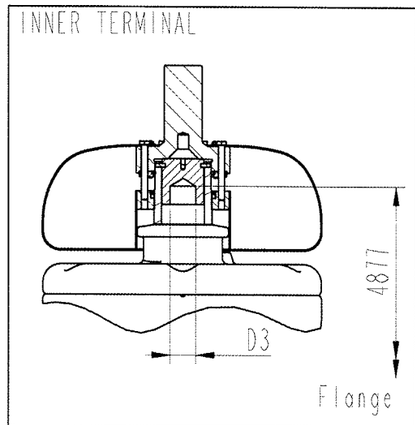

END SHIELD

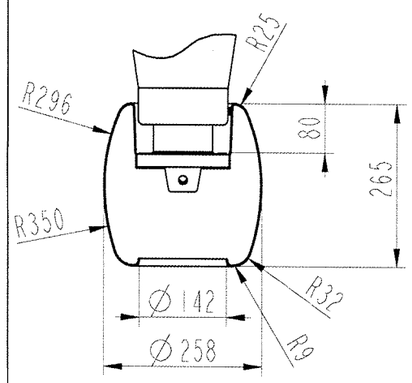

FIXED BOTTOM CONTACT

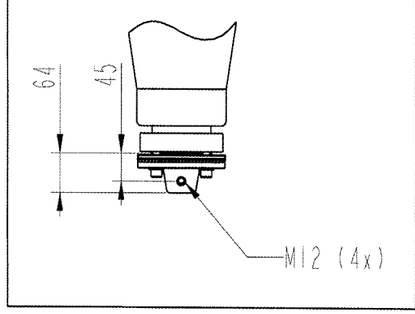

DRAW ROD SYSTEM / OUTER TERMINAL

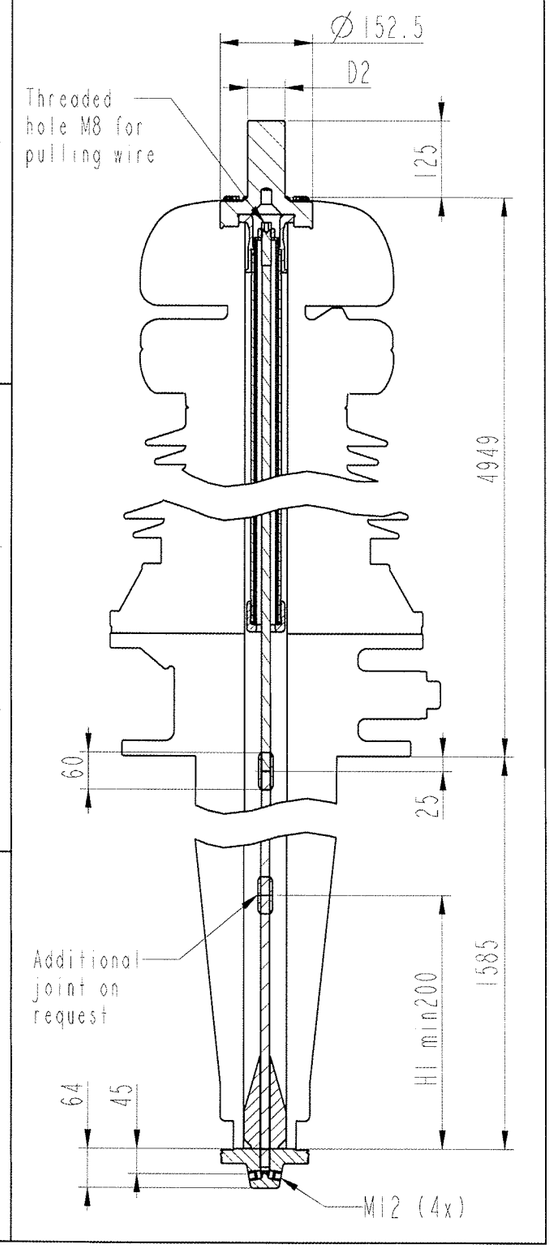

Signatures acc. to revision 0 are valid
Signaturer enligt revision 0 gäller

Based on		Reg. No.	Title
Prepared: P Runnholm 0604		Responsible department: PTPR/CO/BD	GSB 550/1250/0,6
Production engineering review: P Åsmo	Approved: R Hedlund	Take over department	Language: 82
Inspection engineering review: K-E Andersson	Revision	Database: ***	Page: 1(1)
Design engineering review: P Sjöberg	ABB		Document No. 2751377-8

We reserve all rights in this document and in the information contained therein. Reproduction, use or disclosure to third parties without express authority is strictly forbidden. ©ABB