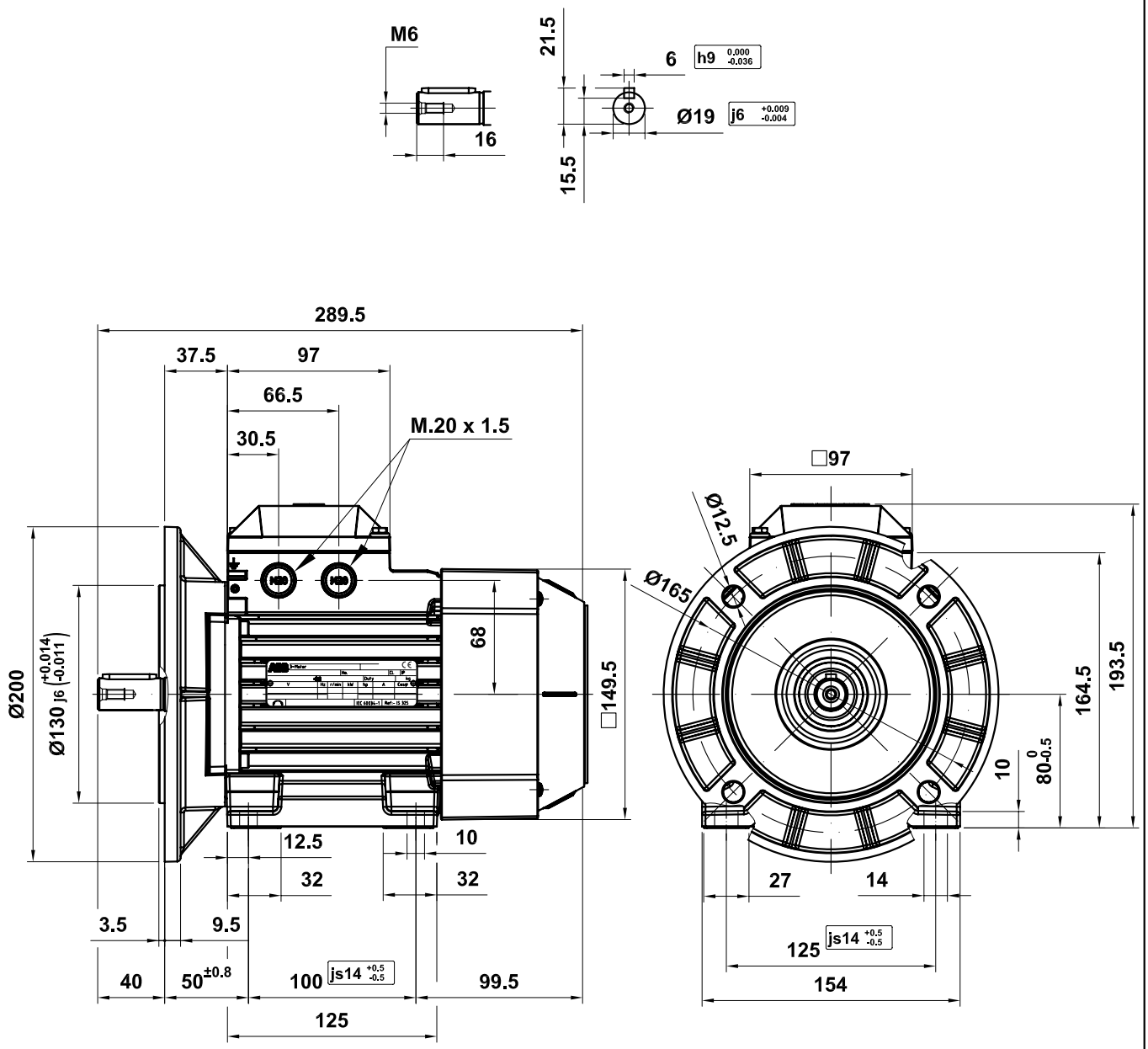

M3AA 080

Motor Dimension Print	Motor Type : M3AA 080 Large	Document Nº : A1.5023 / 3D A2.5023

Description :

Motor foot & flange mounted IM2001 / Motor con patas y brida IM2001

Unit :	Discrete Automation & Motion - Fábrica Motores	Issued by :	ERM/J.Muñoz	Replaces :	To date 2011-03-01
Date :	2011-07-11	Approved by :	ERM/G.Blanes	Replaced by :	

Asea Brown Boveri, S.A.

Customer Reference :

ABB