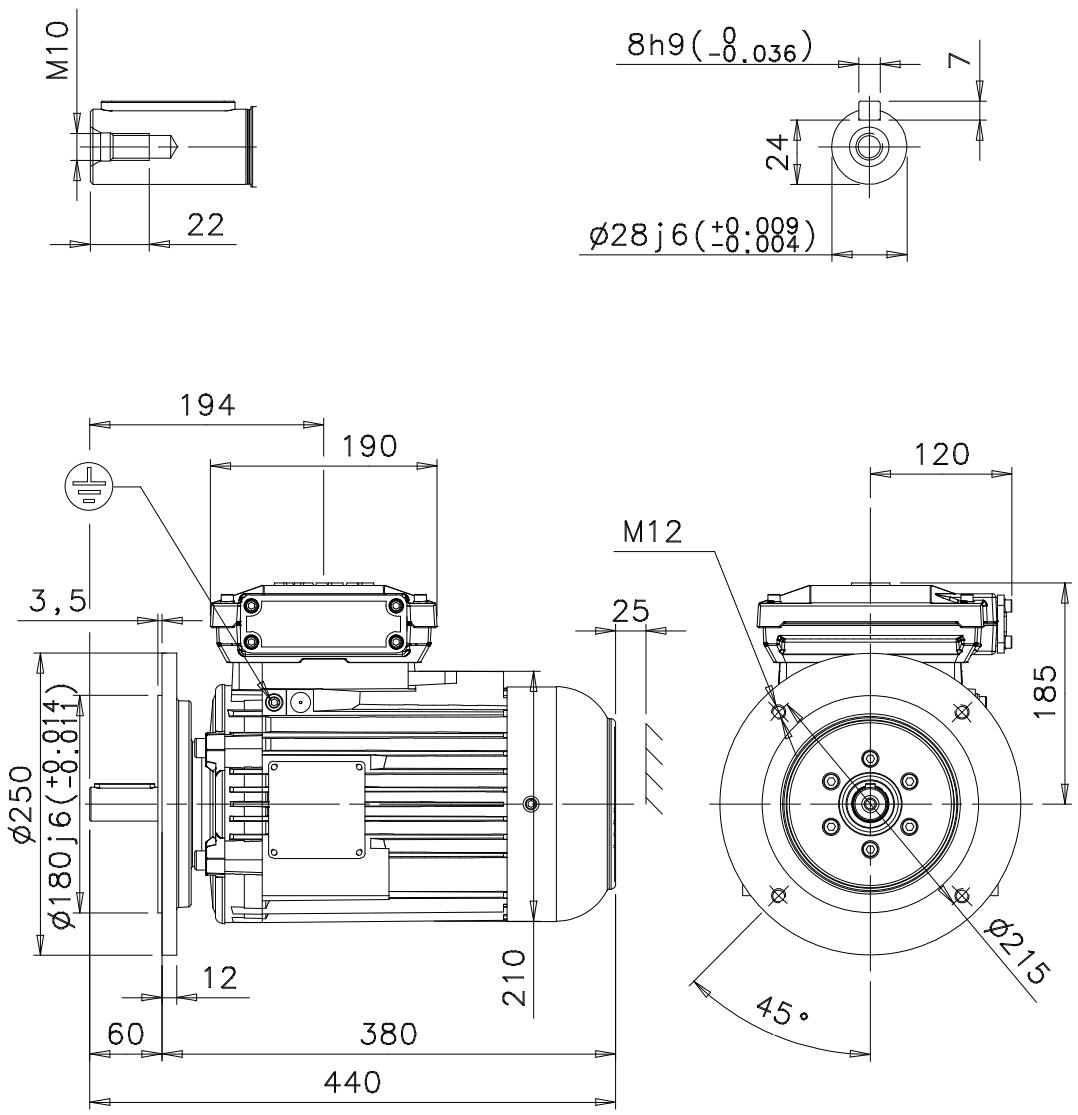

Additional information:

Dimension Print	Motor Type: M3KP/GP/HP 112M_2-8, B14, V19 FT 215	Document No: 3GZF500111-12 B 13 KP 112 A
Description: STANDARD SQUIRREL CAGE MOTOR		

Unit:	ABB Oy, Motors	Issued by:	T.Kuusisto	Replaces:
Date:	25.04.2006	Approved by:	S.Sauna-aho	Replaced by:

ABB Oy	Customer Reference:	ABB