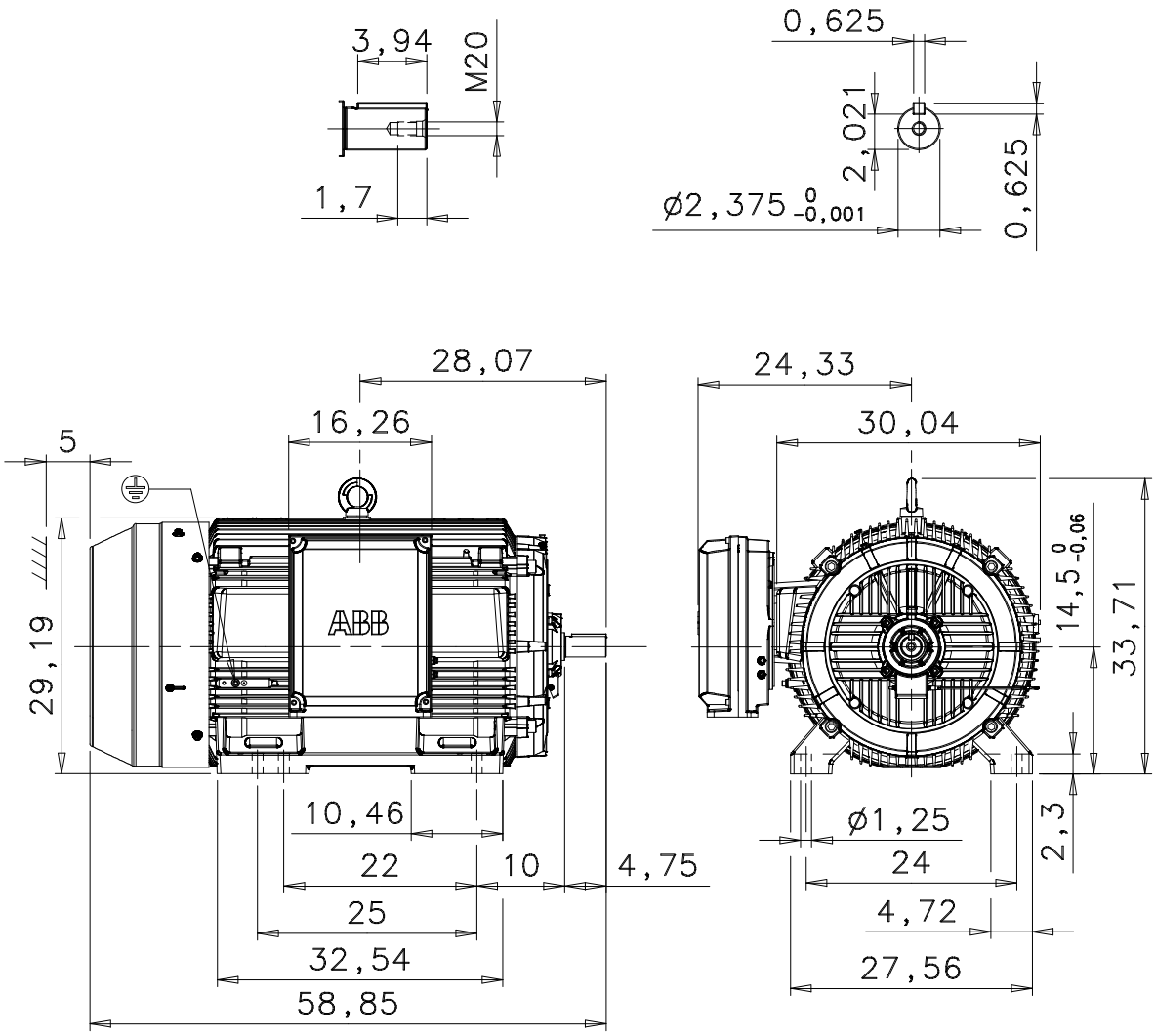

Additional information:

Dimension Print	Motor Type: M3BN 587ML_2 B3, B6, B7, B8, V5, V6	Document No: 3GZF500098-30 A 13 BN 587 A
Description:	STANDARD SQUIRREL CAGE MOTOR, TERMINAL BOX LHS DIMENSIONS IN INCHES, MOTOR SIZES 586 AND 587	

Unit:	Motors	Issued by:	J Hägen	Replaces:	
Date:	28.11.2005	Approved by:	J Rantamäki	Replaced by:	

ABB Oy	Customer Reference:	ABB