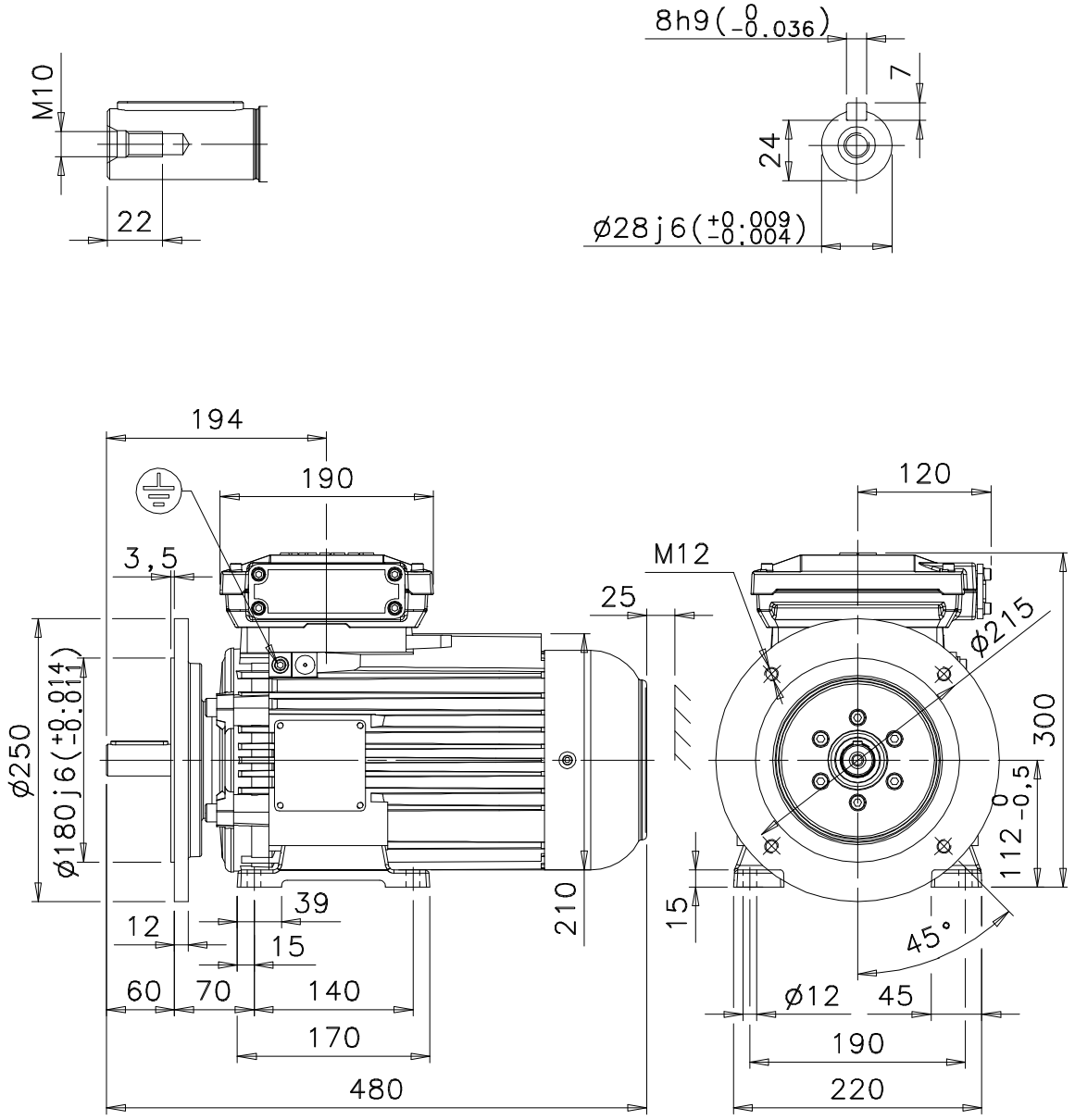

Additional information:

Dimension Print	Motor Type: M3KP/GP/HP 112M_2-8, B34, FT215	Document No: 3GZF500111-60 A 13 KP 112 A
Description: STANDARD SQUIRREL CAGE MOTOR		

Unit:	ABB Oy, Motors and Generators	Issued by:	R.Ketonen	Replaces:
Date:	26.01.2011	Approved by:	J-P.Kuokkala	Replaced by:

ABB Oy	Customer Reference:	ABB