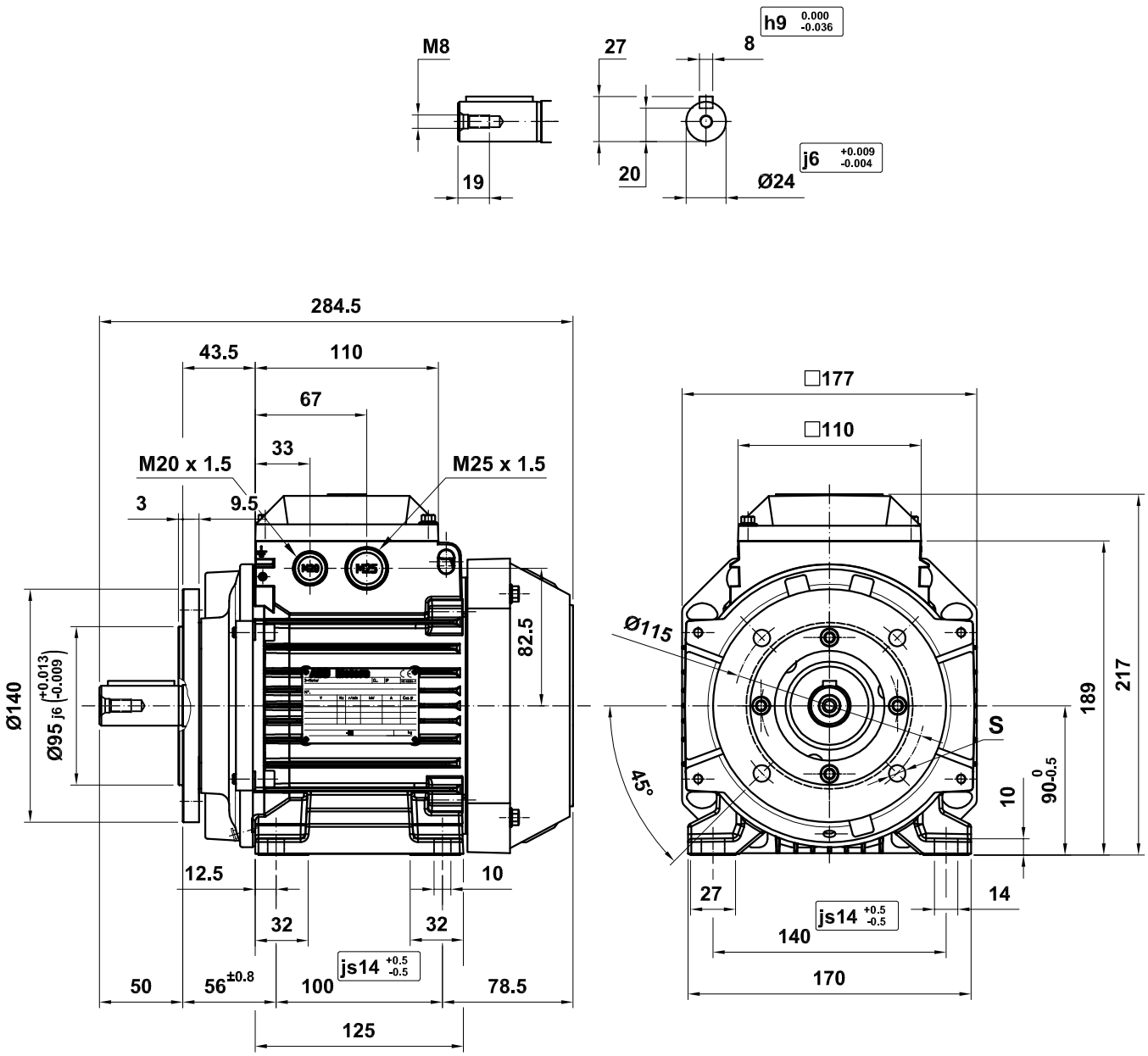

S = { Ø10 – Special IM 3001
M8 – Special IM 3601 }

M2(3)AA 090 S

Motor Dimension Print	Motor Type : M2(3)AA 090 S IMB34 FF(T)-115	Document Nº : A1.4857

Description :

Motor foot and flange mounted special (2-pieces) IM2001 or IM2101

Unit : Automation Products - Fábrica Motores	Issued by : EMD/G.Gállego	Replaces :
Date : 2008-03-05	Approved by : EMD/G.Blanes	Replaced by :

Asea Brown Boveri, S.A.

Customer Reference :

ABB