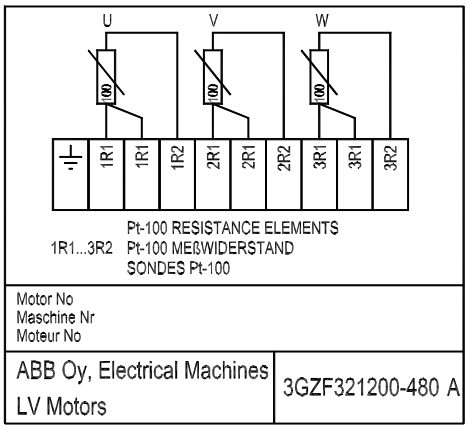


| | |
|---|---|
| **Accessory Connection Diagram** | Document No: 3GZF321200-480 A |
| Description: Pt-100 RESISTANCE ELELMENTS | |

| | | | | |
|---|---|---|---|---|
| Unit: | Electrical Machines, LV Motors | Issued by: | K.Högkvist | Replaces: |
| Date: | 02.04.2002 | Approved by: | V.Lappalainen | Replaced by: |

| | | |
|---|---|---|
| **ABB Oy** | Customer Reference: | ABB |