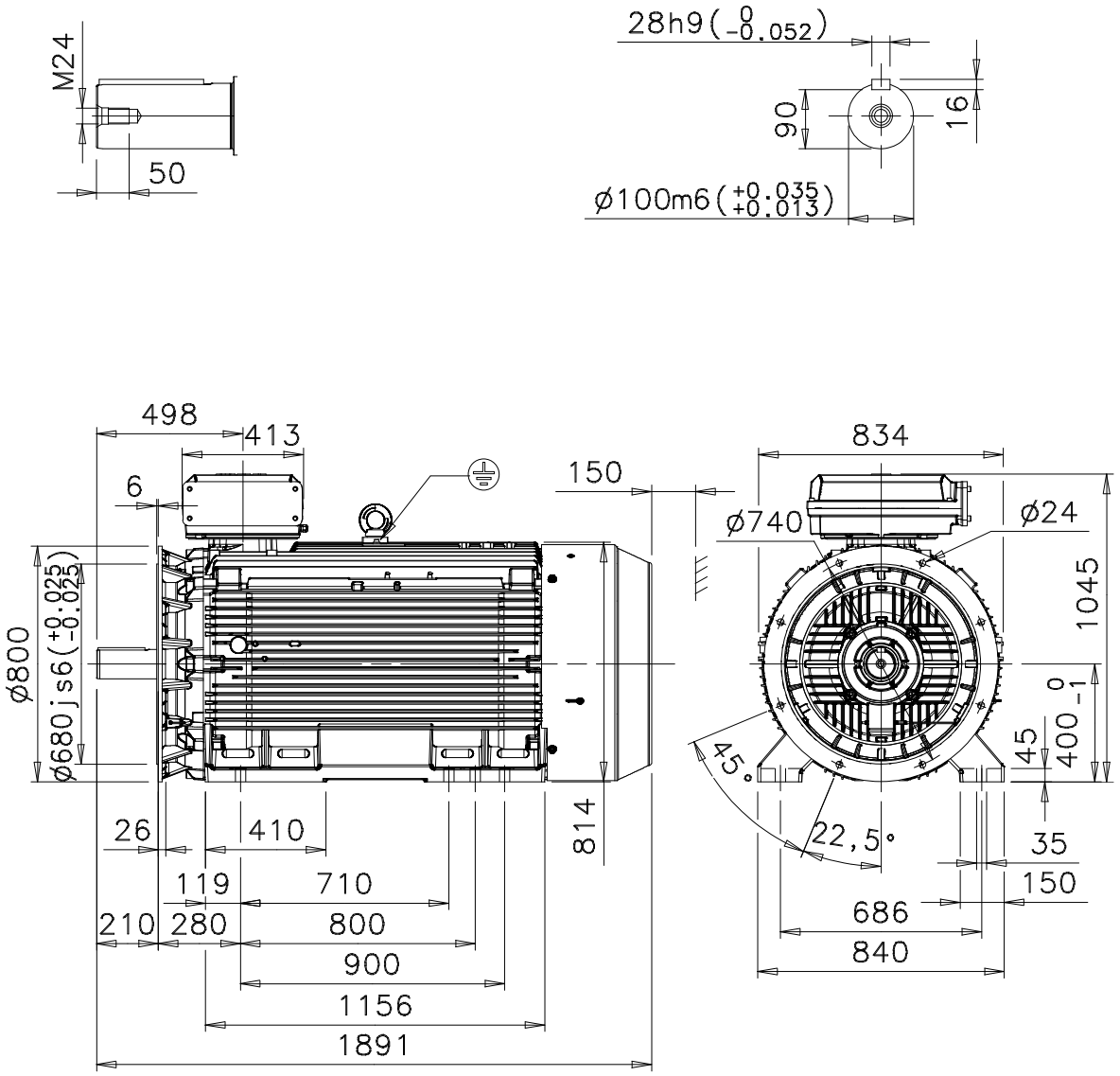

Additional information:

Dimension Print	Motor Type: M3BP 400LK_4-12 B35, V15, V36 M3HP/GP 400LK_4-12 B35,V36	Document No: 3GZF500040-19 B 13 BP 400 A
Description: STANDARD SQUIRREL CAGE MOTOR		

Unit:	Electrical Machines / LV Motors	Issued by:	K.Edsvik	Replaces:
Date:	19.02.2003	Approved by:	M.Sevola	Replaced by:

ABB Oy	Customer Reference:	ABB