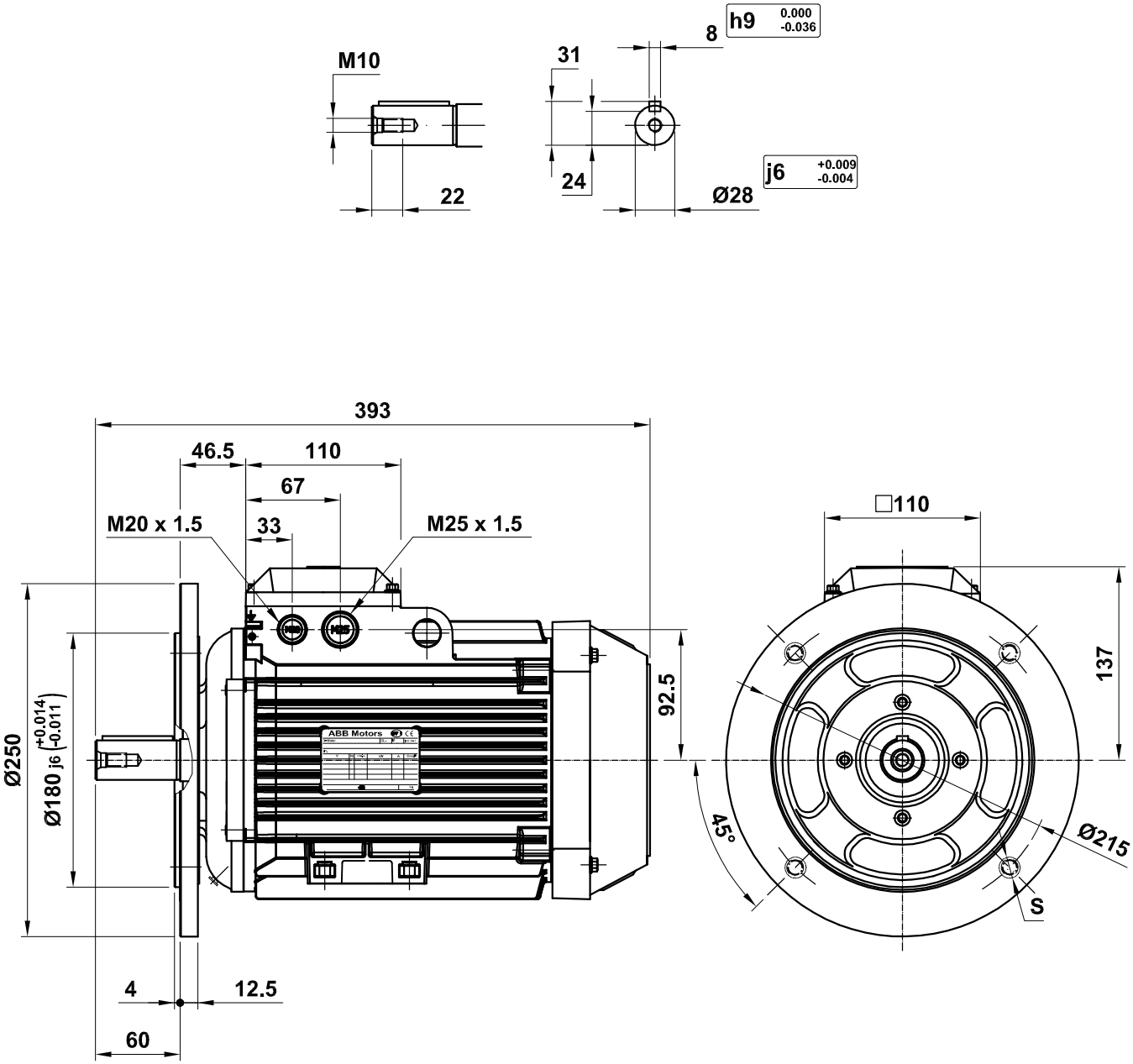

S = { Ø15 – Special IM 3001
M12 – Special IM 3601 }

M2(3)AA 112

Motor Dimension Print	Motor Type : M2(3)AA 112 IM-B5 FF(T)-215	Document N° : A1.4944

Description :
Motor flange mounted special (2-pieces) IM3001 or IM3601

Unit : Automation Products - Fábrica Motores	Issued by : EMD/ G.Gállego	Replaces :
Date : 2008-05-13	Approved by : EMD/ G.Blanes	Replaced by :
Asea Brown Boveri, S.A.	Customer Reference :	ABB