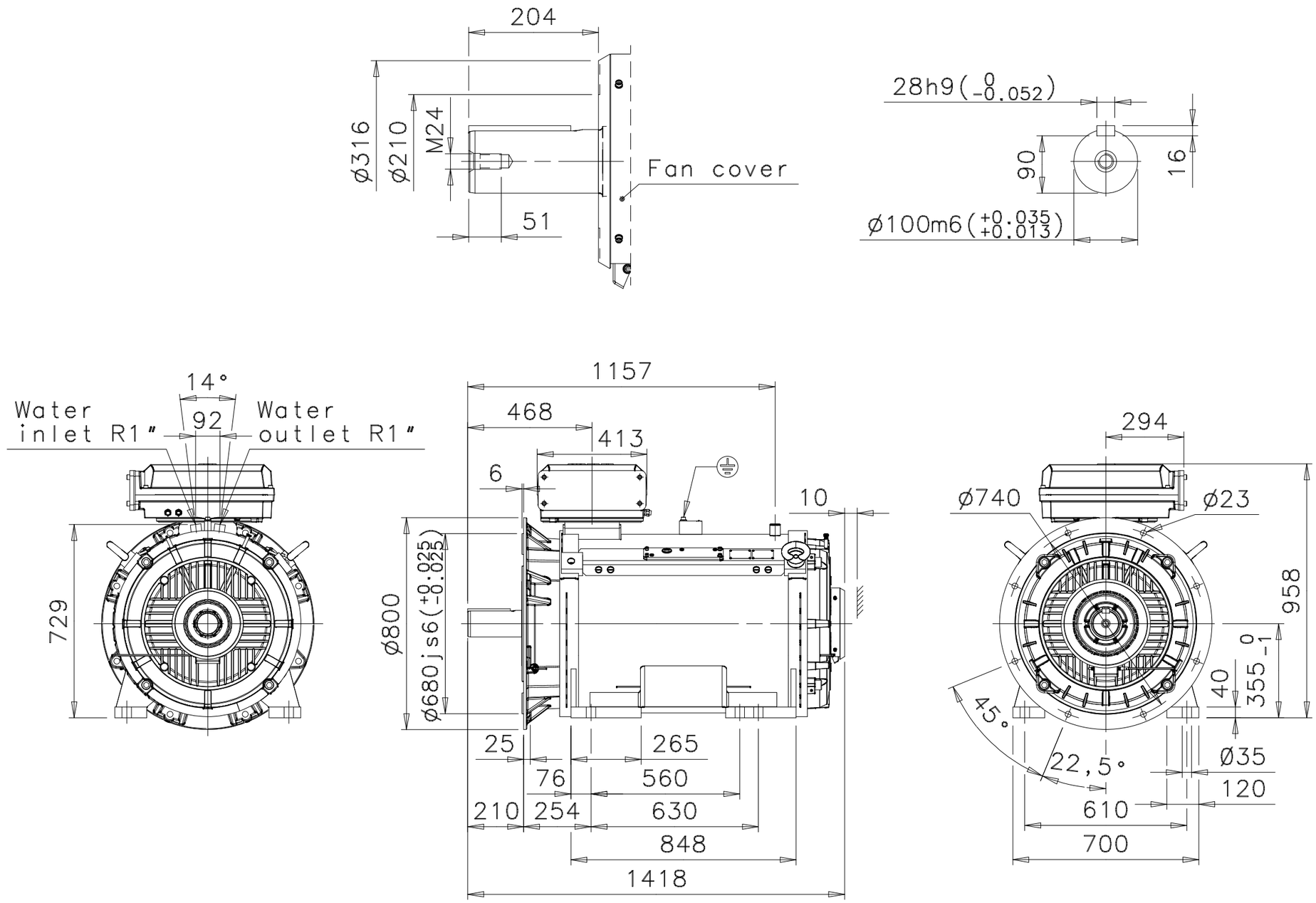

Comment:	**Dimension Print**	Motor Type: M3LP 355ML_4-12 B35, V15, V36	Document No: 3GZF500635-50 A 13 LP 355 A
	Description:	WATER COOLED SQUIRREL CAGE MOTOR WITH TERMINAL BOX 750.	
	Unit: Motors Date: 01.11.2007	Issued by: K.Heikfolk Approved by: T.Aro	Replaces: Replaced by:
	ABB Oy	Customer Reference:	ABB