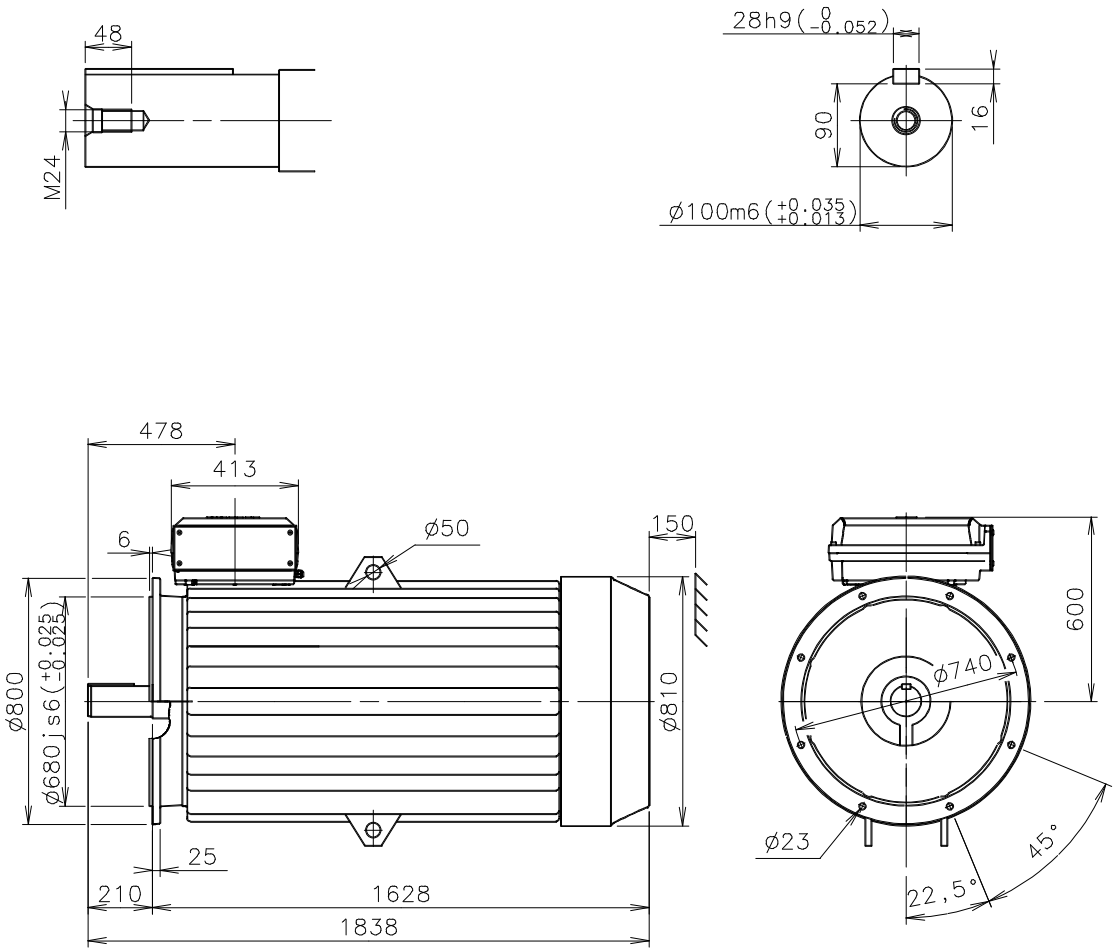

Additional information:

Dimension Print	Motor Type: M2CA 400LK_ 4-12 B5,V1,V3	Document No: 3GZF500440-23 A 13 CA 400 A
Description: STANDARD SQUIRREL CAGE MOTOR		

Unit:	Motors	Issued by:	P.Viitanen	Replaces:	
Date:	11.05.2006	Approved by:	J. Hirviniemi	Replaced by:	

ABB Oy	Customer Reference:	ABB