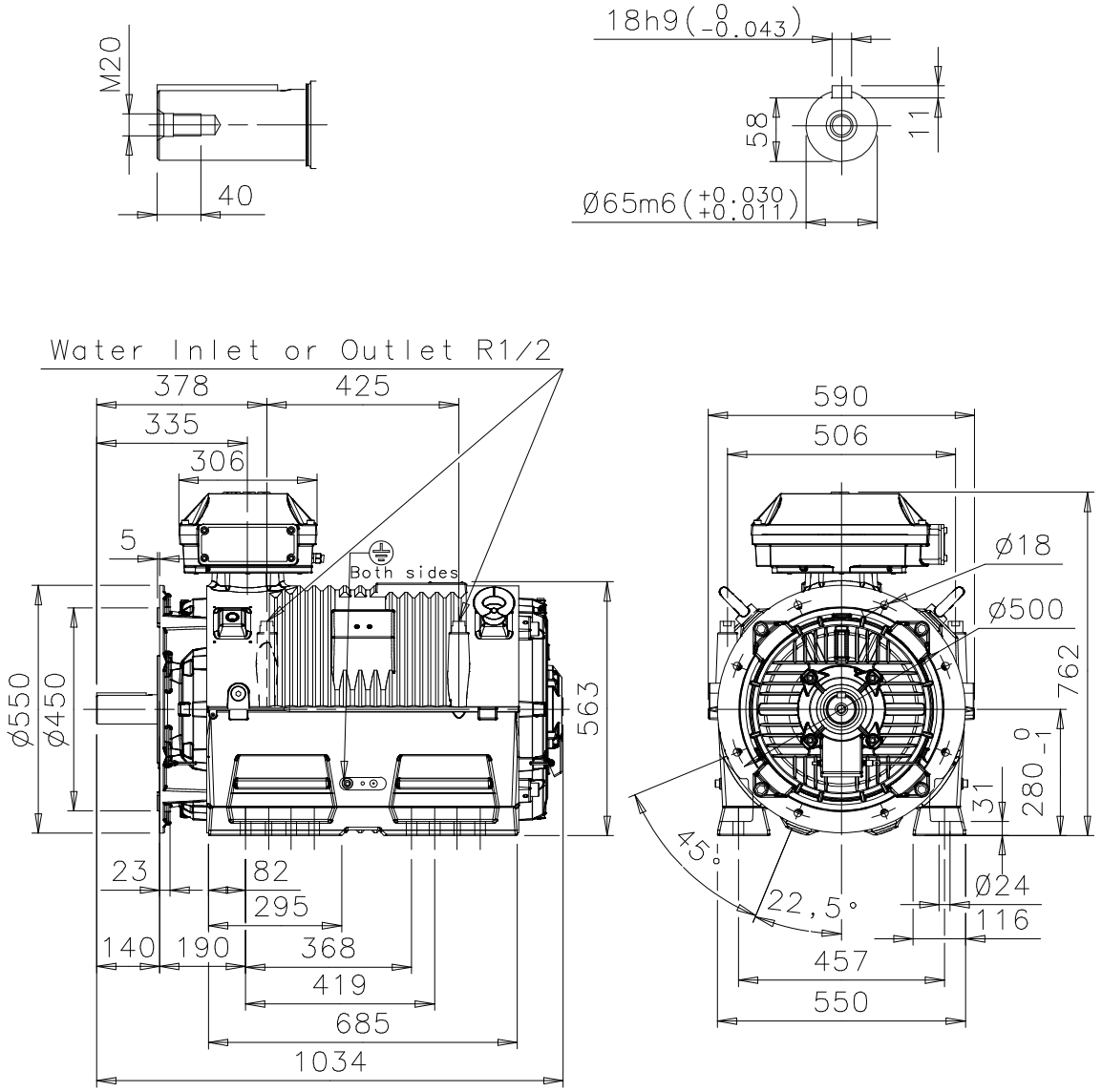

Additional information:

Dimension Print	Motor Type: M3LP 280SM_2 B35, V15, V36	Document No: 3GZF500628-39 A 13 LP 280 A
Description: WATER COOLED SQUIRREL CAGE MOTOR WITH TERMINAL BOX 210.		

Unit:	Motors	Issued by:	A-R.Mäki	Replaces:	
Date:	10.07.2009	Approved by:	T.Aro	Replaced by:	

ABB Oy	Customer Reference:	ABB