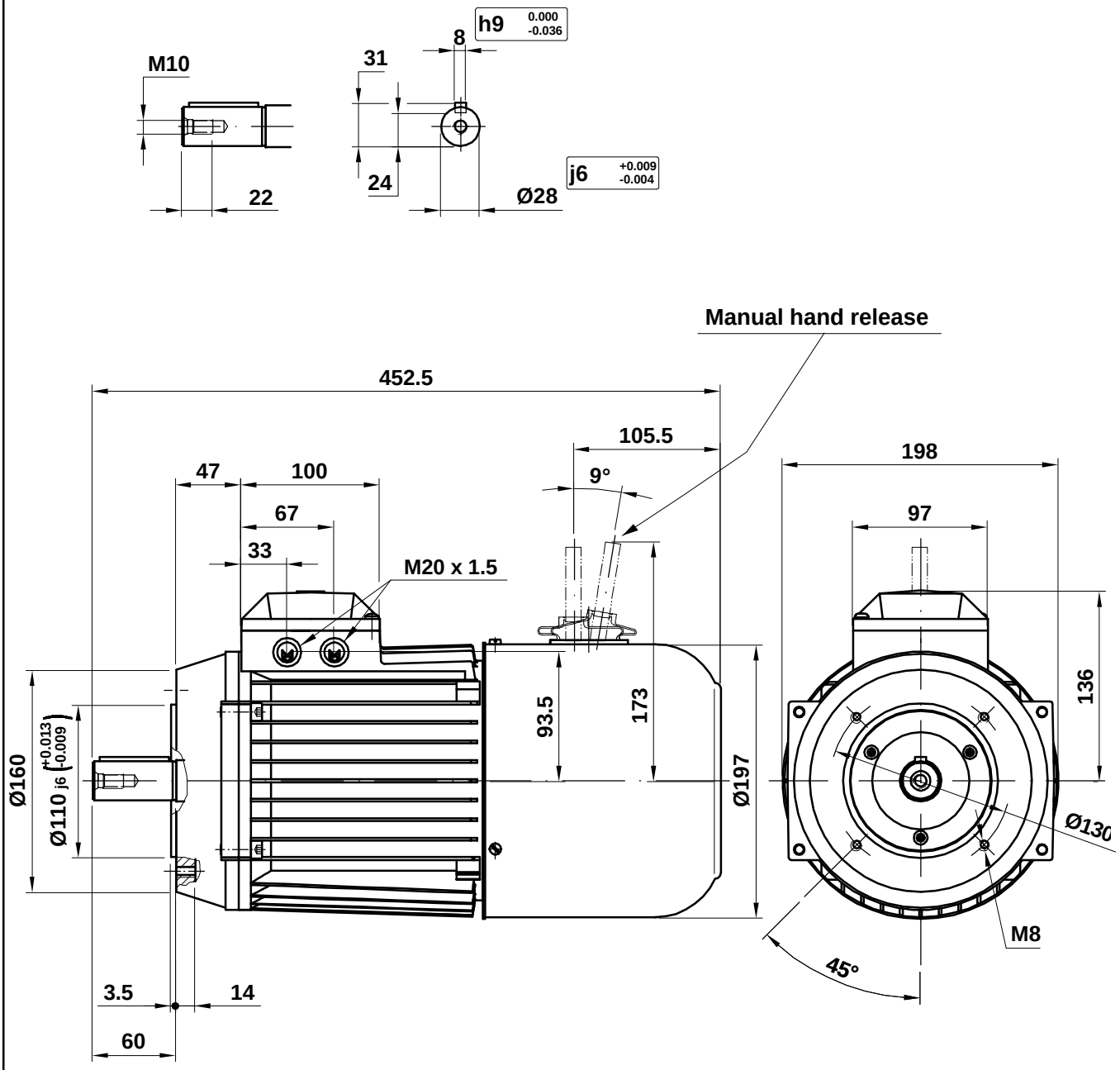

M3ARF/S 100

Motor Dimension Print	Motor Type : M3ARF/S 100	Document Nº : A1.3207

Description :

Brake motor flange mounted IM 3601

Unit : División Motores, Spain	Issued by : IKA/G.Blanes	Replaces :	
Date : 2002-01-03	Approved by : IKA/E.Sáenz	Replaced by :	
ABB Automation Products, S.A.	Customer Reference :		ABB