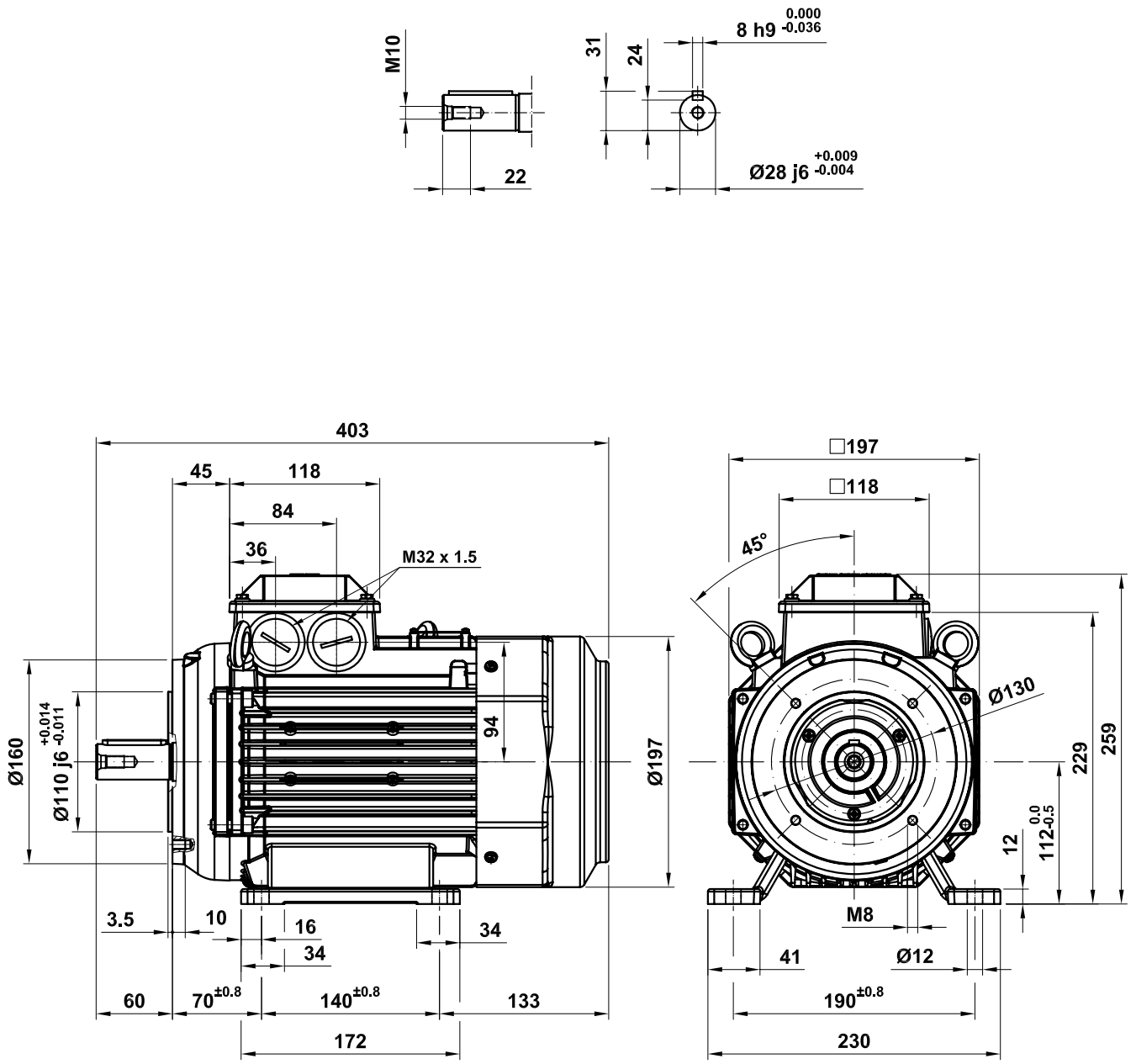

M2(3)BA 112
M3BP 112

Motor Dimension Print	Motor Type : M2(3)BA / M3BP 112	Document Nº : A1.4983

Description :

Motor foot & flange mounted / Motor con patas y brida. IM2101 (FT-130)

Unit :	Automation Products - Fábrica Motores	Issued by :	EMD / J.Muñoz	Replaces :	2008-07-09
Date :	2009-09-02	Approved by :	EMD / G.Blanes	Replaced by :	

Asea Brown Boveri, S.A.

Customer Reference :

ABB