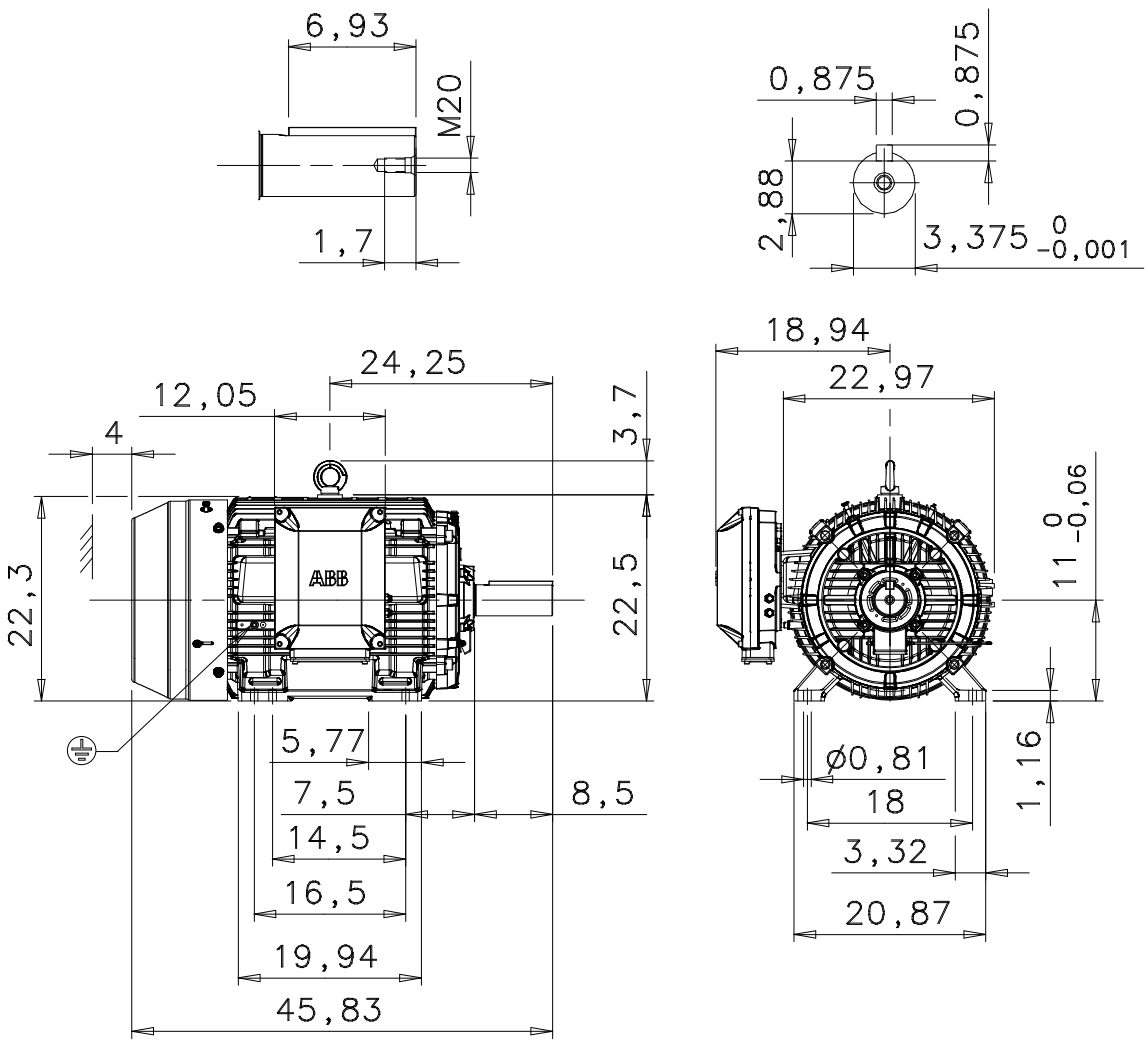

Additional information:

Dimension Print	Motor Type: M3BN 445SM_ 4… B3 V5 V6 B6 B7 B8	Document No: 3GZF500084-8 A 13 BN 445 A
Description:	STANDARD SQUIRREL CAGE MOTOR, TERMINAL BOX LHS DIMENSIONS IN INCHES, MOTOR SIZES 444 AND 445	

Unit:	Motors	Issued by:	B.Lillsjö.	Replaces:
Date:	09.11.2005	Approved by:	J.Rantamäki	Replaced by:

ABB Oy	Customer Reference:	ABB