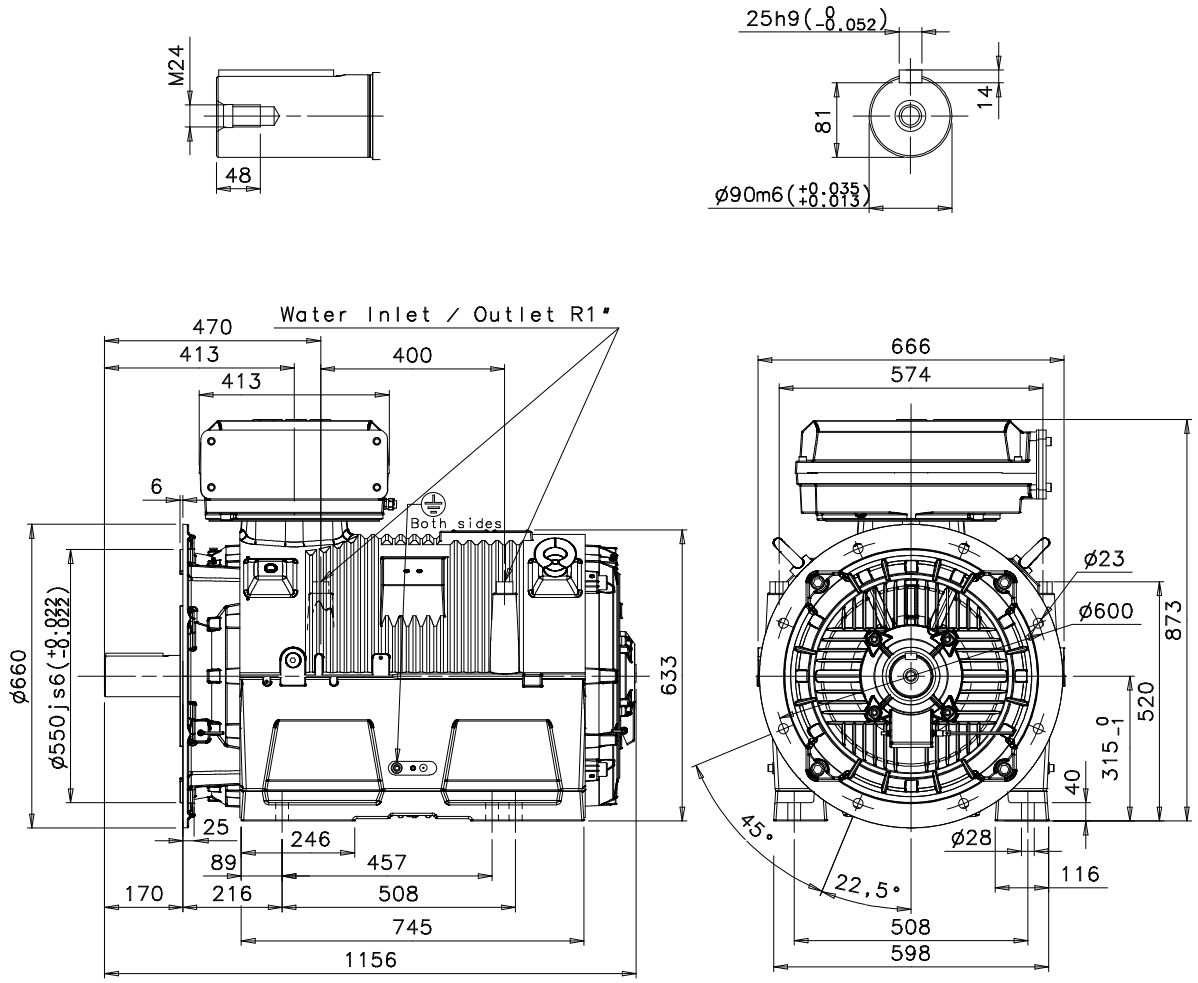

Additional information:

Dimension Print	Motor Type: M3LP 315ML_4-8 B35, V15, V36	Document No: 3GZF500631-41 A 13 LP 315 A
Description: STANDARD WATER COOLED SQUIRREL CAGE MOTOR WITH TERMINAL BOX 750.		

Unit:	Motors	Issued by:	P.Lehtonen	Replaces:
Date:	05.05.2010	Approved by:	T.Aro	Replaced by:

ABB Oy	Customer Reference:	ABB