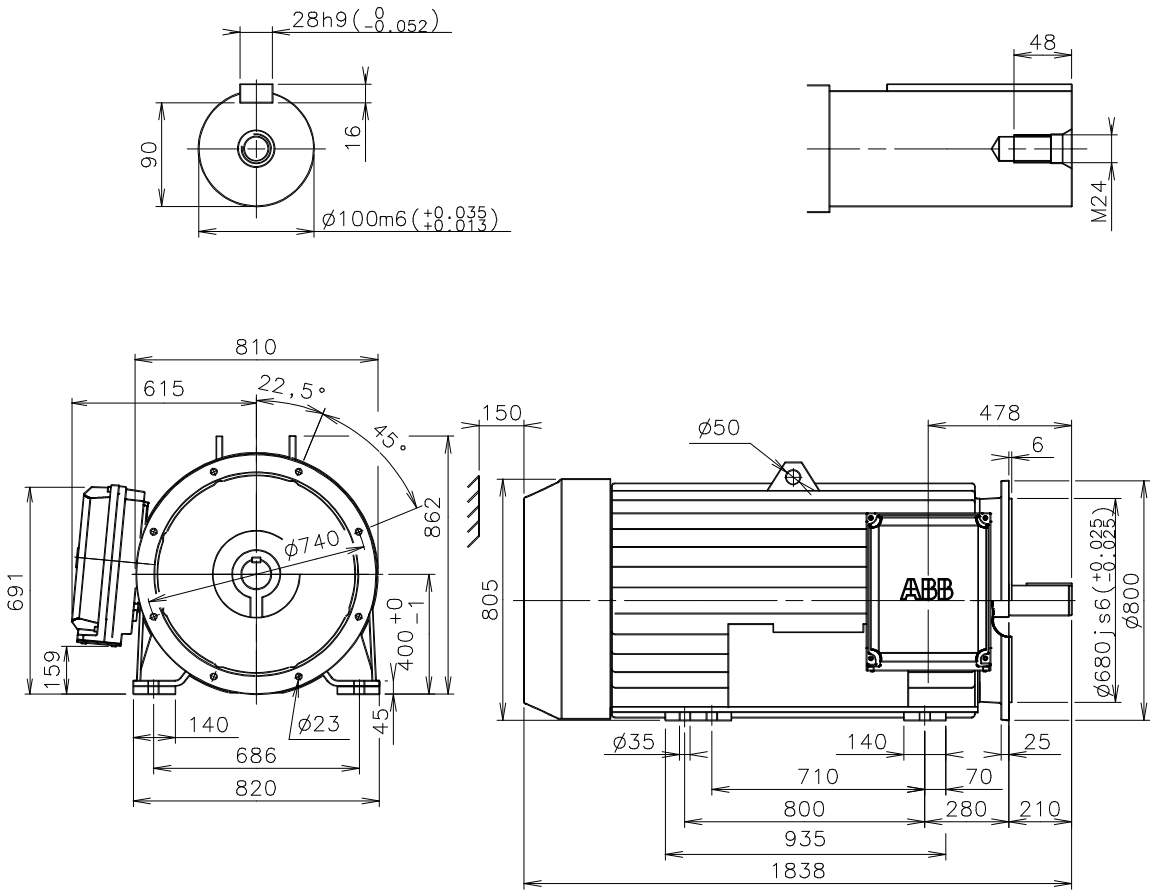

Additional information:

Dimension Print	Motor Type: M2CA 400LK_ 4-12 B35, V15, V36	Document No: 3GZF500440-28 A 13 CA 400 A
Description: STANDARD SQUIRREL CAGE MOTOR, TERMINAL BOX LHS		

Unit:	Motors	Issued by:	P.Viitanen	Replaces:
Date:	11.05.2006	Approved by:	J. Hirviniemi	Replaced by:

ABB Oy	Customer Reference:	ABB