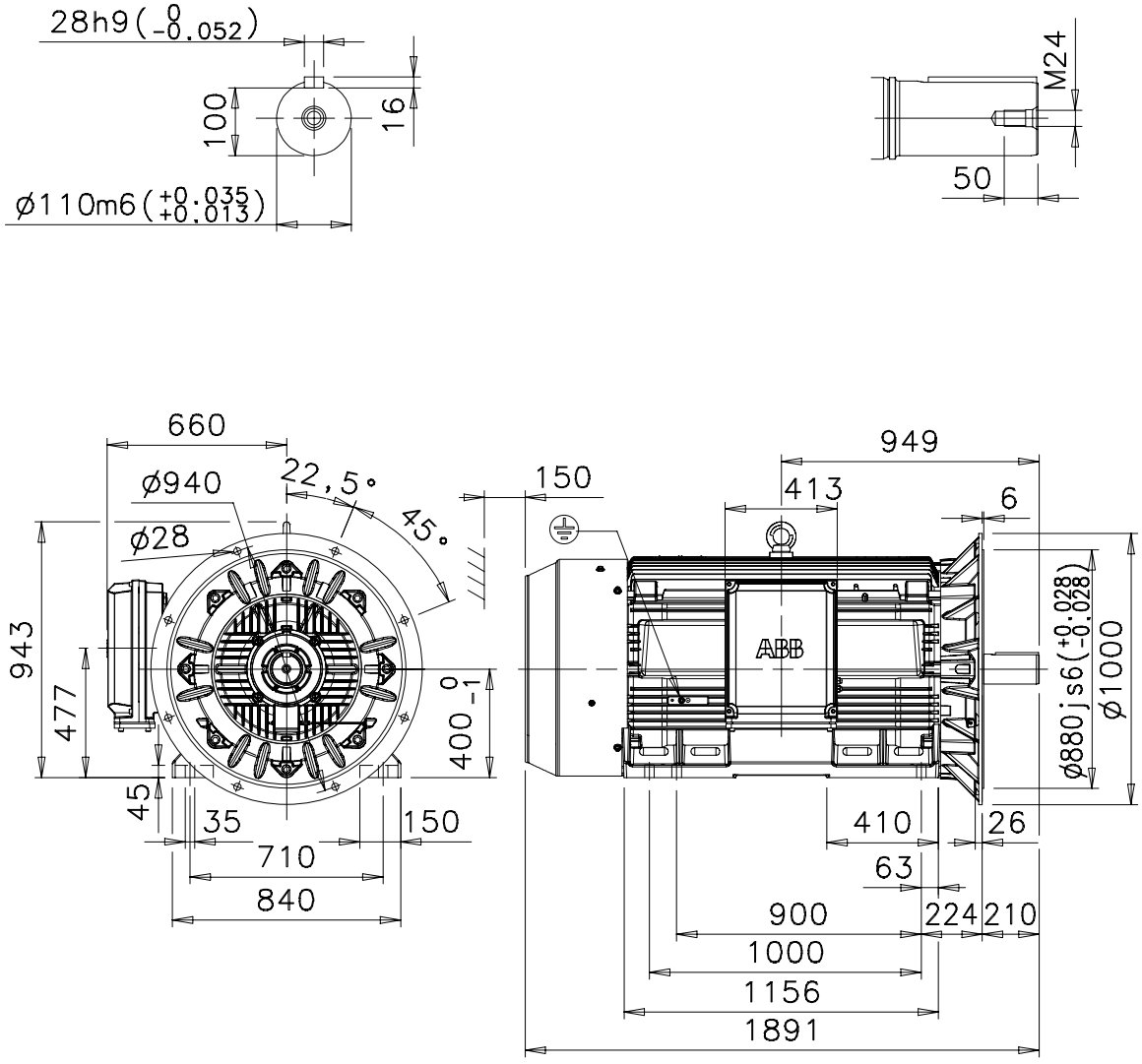

Additional information:

Dimension Print	Motor Type: M3BP 400L_4-12 B35, V15, V36 M3HP/GP 400L_4-12 B35, V36	Document No: 3GZF500040-9 A 13 BP 400 A
Description: STANDARD SQUIRREL CAGE MOTOR, TERMINAL BOX LHS		

Unit: Electrical Machines / LV Motors	Issued by: K.Edsvik	Replaces:	
Date: 25.09.2002	Approved by: M.Sevola	Replaced by:	
ABB Oy	Customer Reference:		ABB