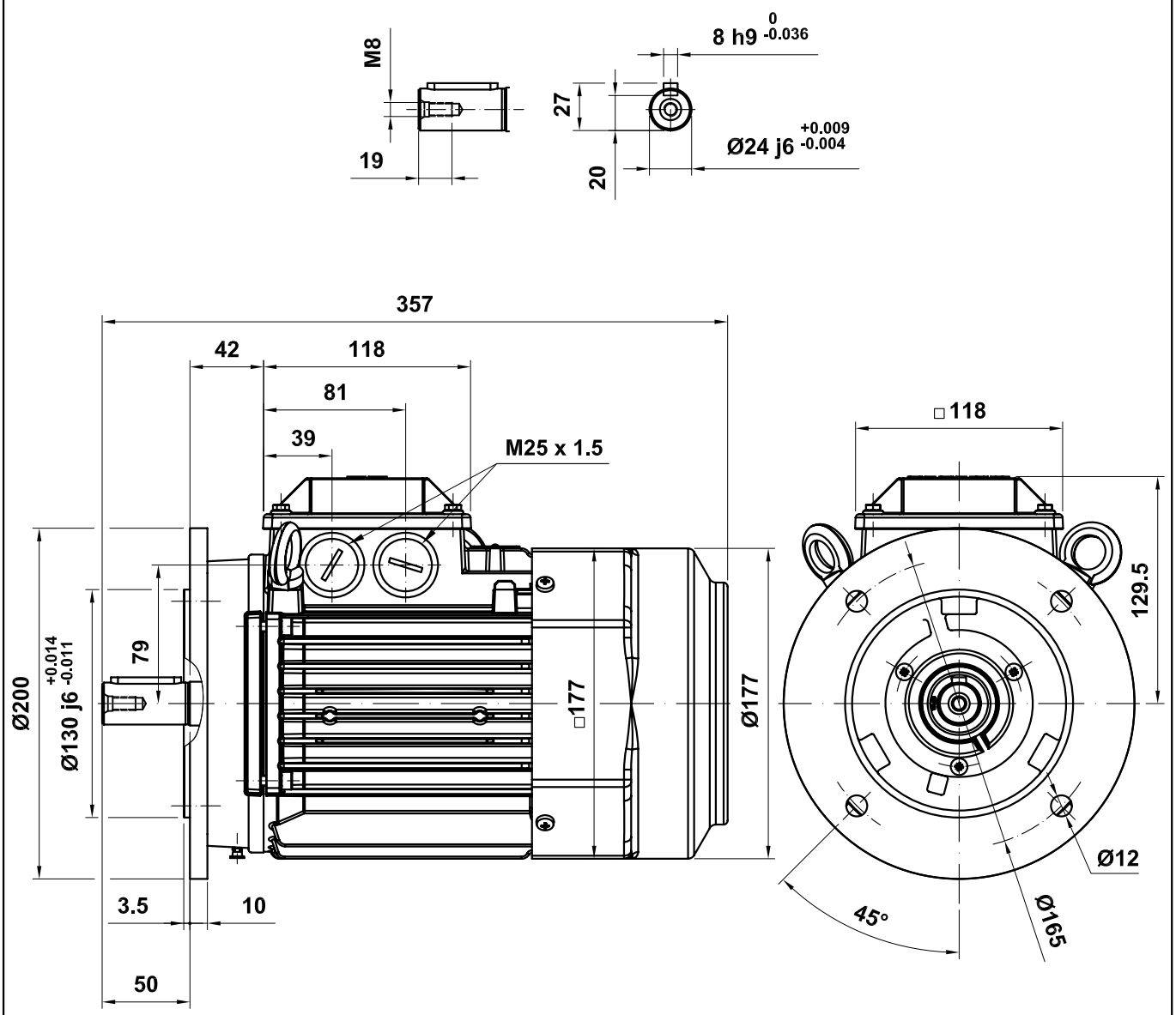

M2(3)BA 090
M3BP 090

Motor Dimension Print	Motor Type : M2(3)BA / M3BP 090	Document Nº : A1.4968

Description :

Motor flange mounted / Motor con brida. IM3001 (FF-165)

Unit :	Automation Products - Fábrica Motores	Issued by :	EMD / E.Sáenz	Replaces :	2008-07-09
Date :	2009-09-02	Approved by :	EMD / G.Blanes	Replaced by :	

Asea Brown Boveri, S.A.

Customer Reference :

ABB