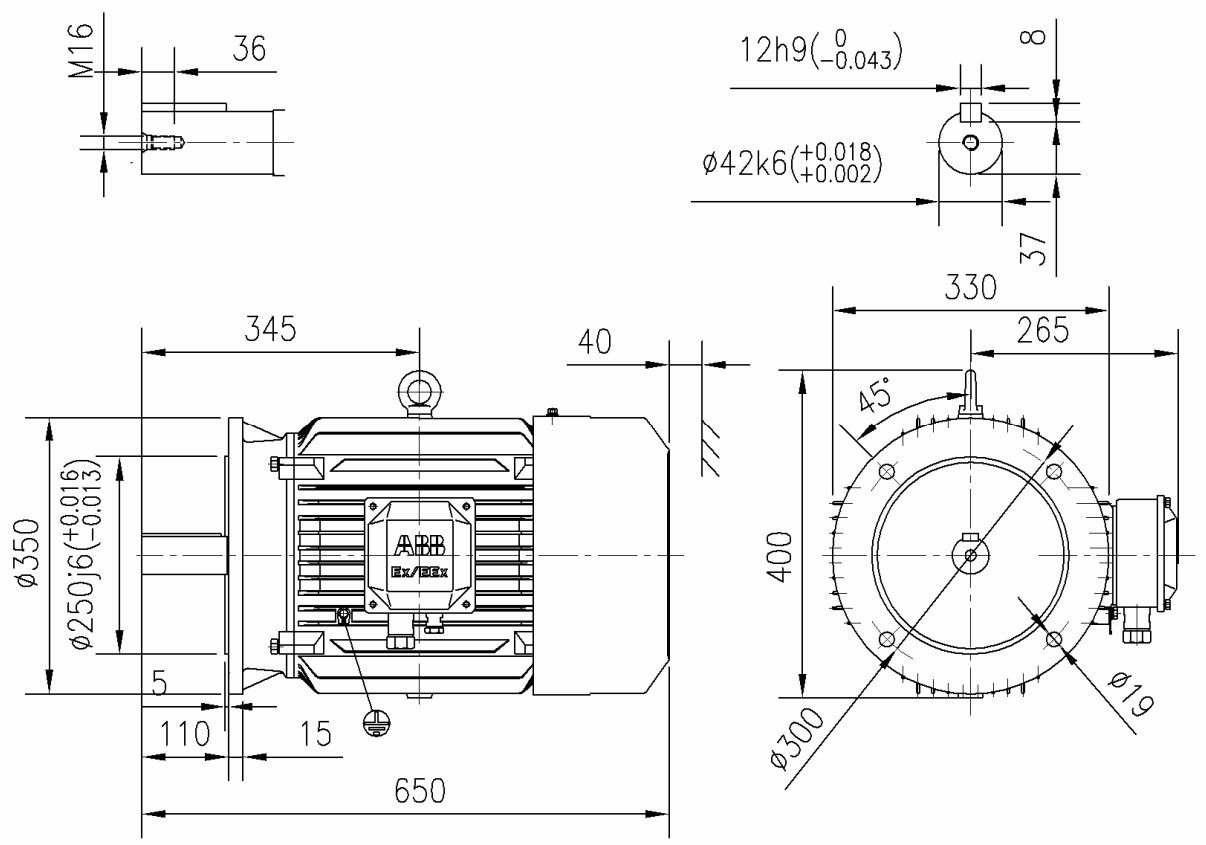

Additional information:

Dimension Print	Motor Type: M2GP 160L 2… B5, V3	Document No: 3GZF500016-200 A 13 GP 160 A
Description: STANDARD SQUIRREL CAGE MOTOR		

Unit:	Motors	Issued by:	WenWen Sheng	Replaces:
Date:	2006.06.12	Approved by:	M Sevola	Replaced by:

ABB Oy	Customer Reference:	ABB