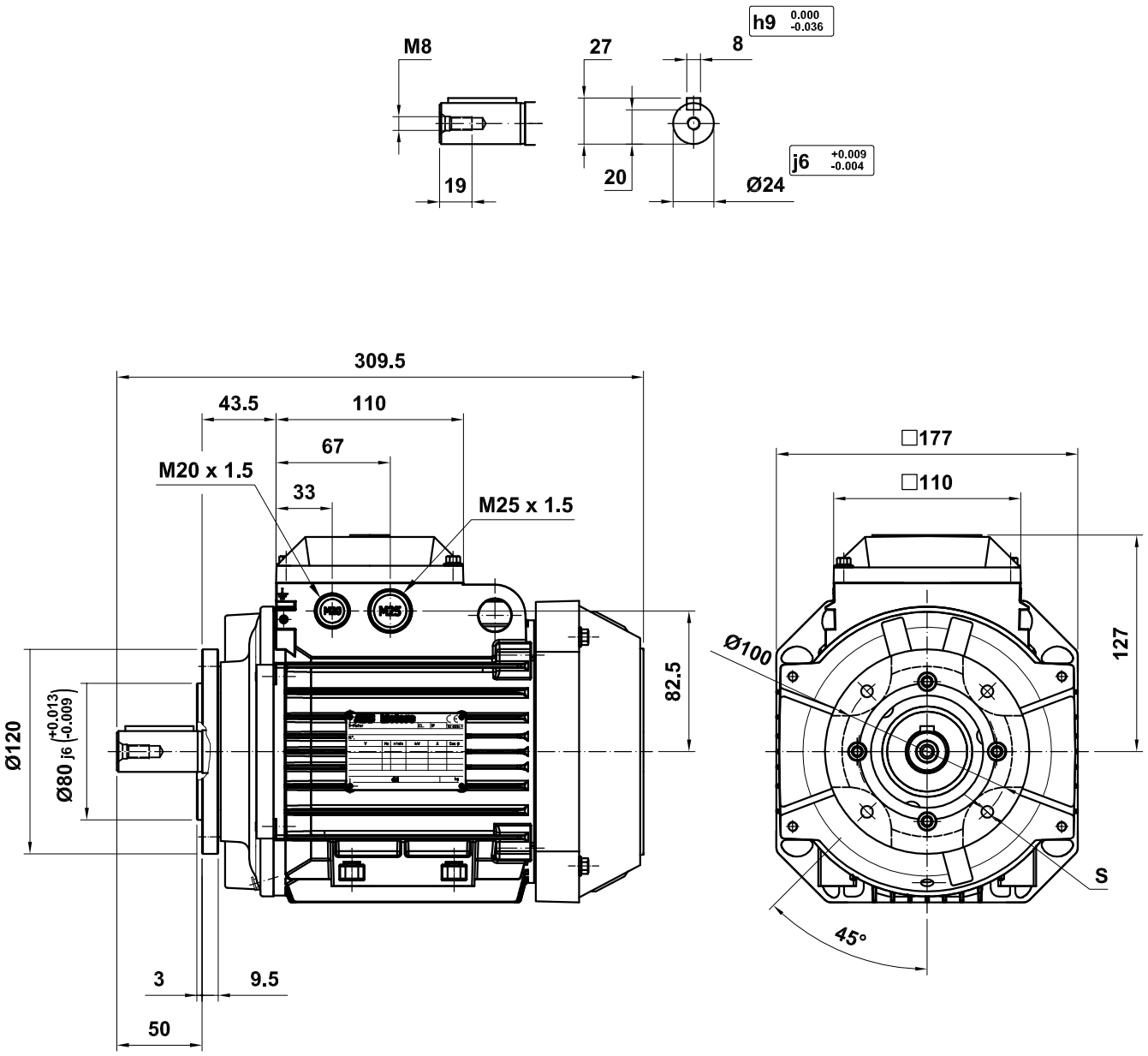

S = { Ø7 – Special IM 3001 / M6 – Special IM 3601 }

M2(3)AA 090L

(*) Except 090 LD

Motor Dimension Print	Motor Type : M2(3)AA 090 L IMB5(14) FF(T)-100 (*)	Document Nº : A1.4883
Description : Motor flange mounted special (2-pieces) IM3001 or IM3601		
Unit : Automation Products - Fábrica Motores Date : 2008-02-25	Issued by : EMD/ G.Gállego Approved by : EMD/ G.Blanes	Replaces : Replaced by :
Asea Brown Boveri, S.A.	Customer Reference :	ABB