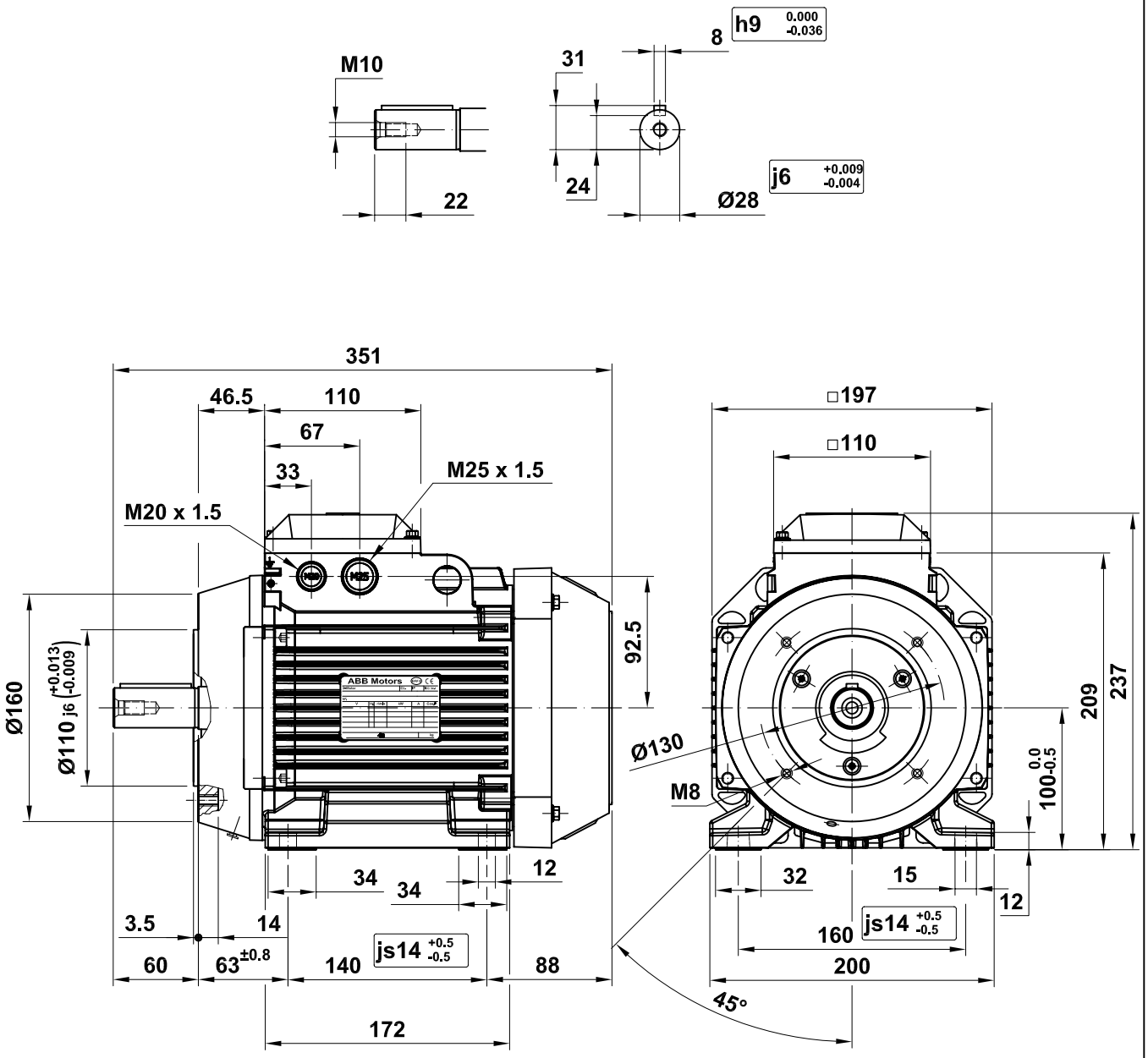

M2(3)AA 100

(*) Except 100 LD

Motor Dimension Print	Motor Type : M2(3)AA 100 L (*)	Document Nº : A1.4726

Description :
Motor foot and flange mounted IM2101 / Motor con patas y brida IM2101

Unit : Automation Products - Fábrica Motores	Issued by : EMD/ J.Muñoz	Replaces :
Date : 2008-02-18	Approved by : EMD/ G.Blanes	Replaced by :

Asea Brown Boveri, S.A.

Customer Reference :

ABB