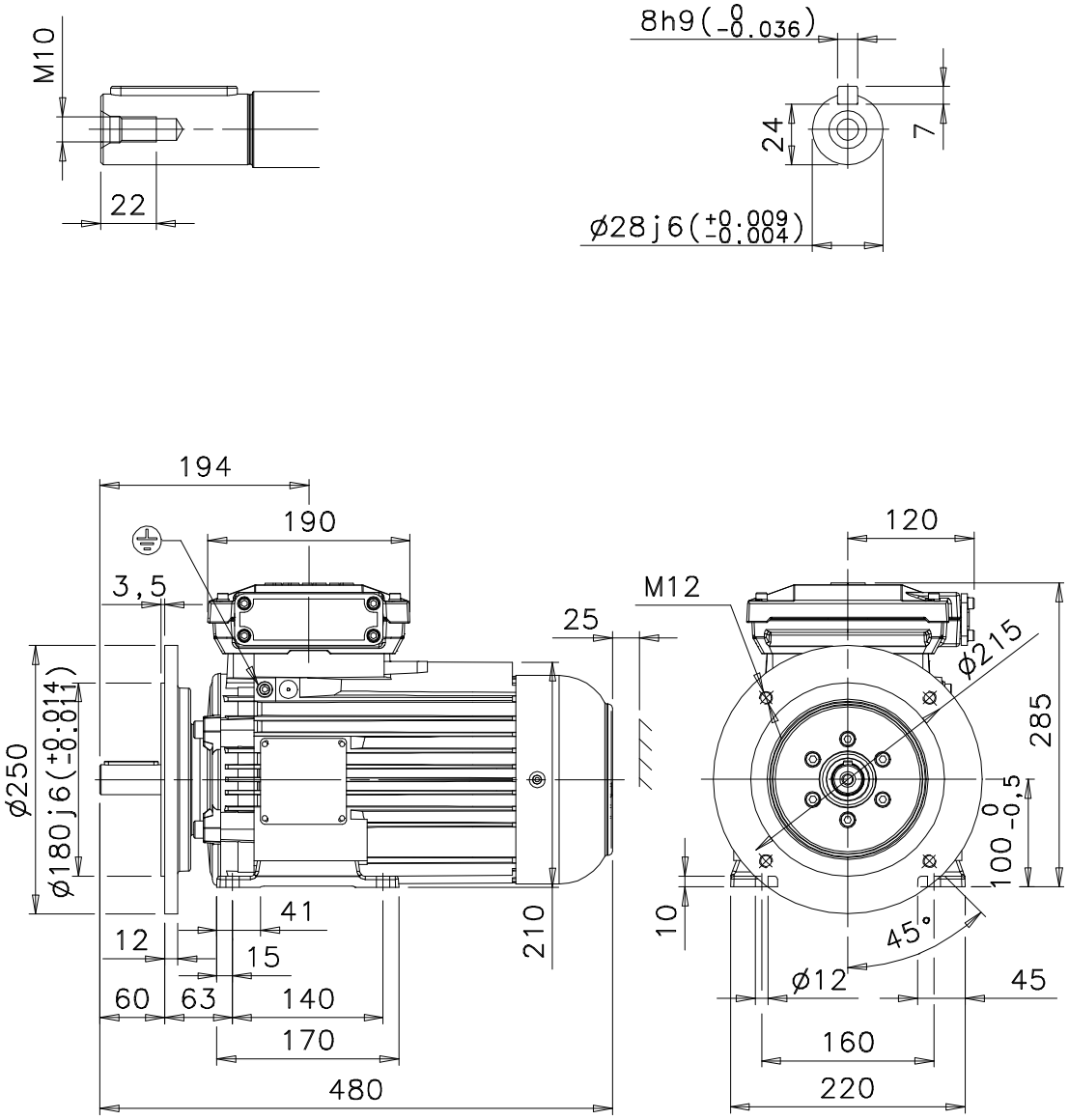

Additional information:

Dimension Print	Motor Type: M3KP/GP/HP 100L_2-8 B34 FT 215	Document No: 3GZF500110-71 A 13 KP 100 A
Description: STANDARD SQUIRREL CAGE MOTOR		

Unit:	ABB Oy, Motors and Generators	Issued by:	R.Ketonen	Replaces:
Date:	13.01.2011	Approved by:	J-P.Kuokkala	Replaced by:

ABB Oy	Customer Reference:	ABB