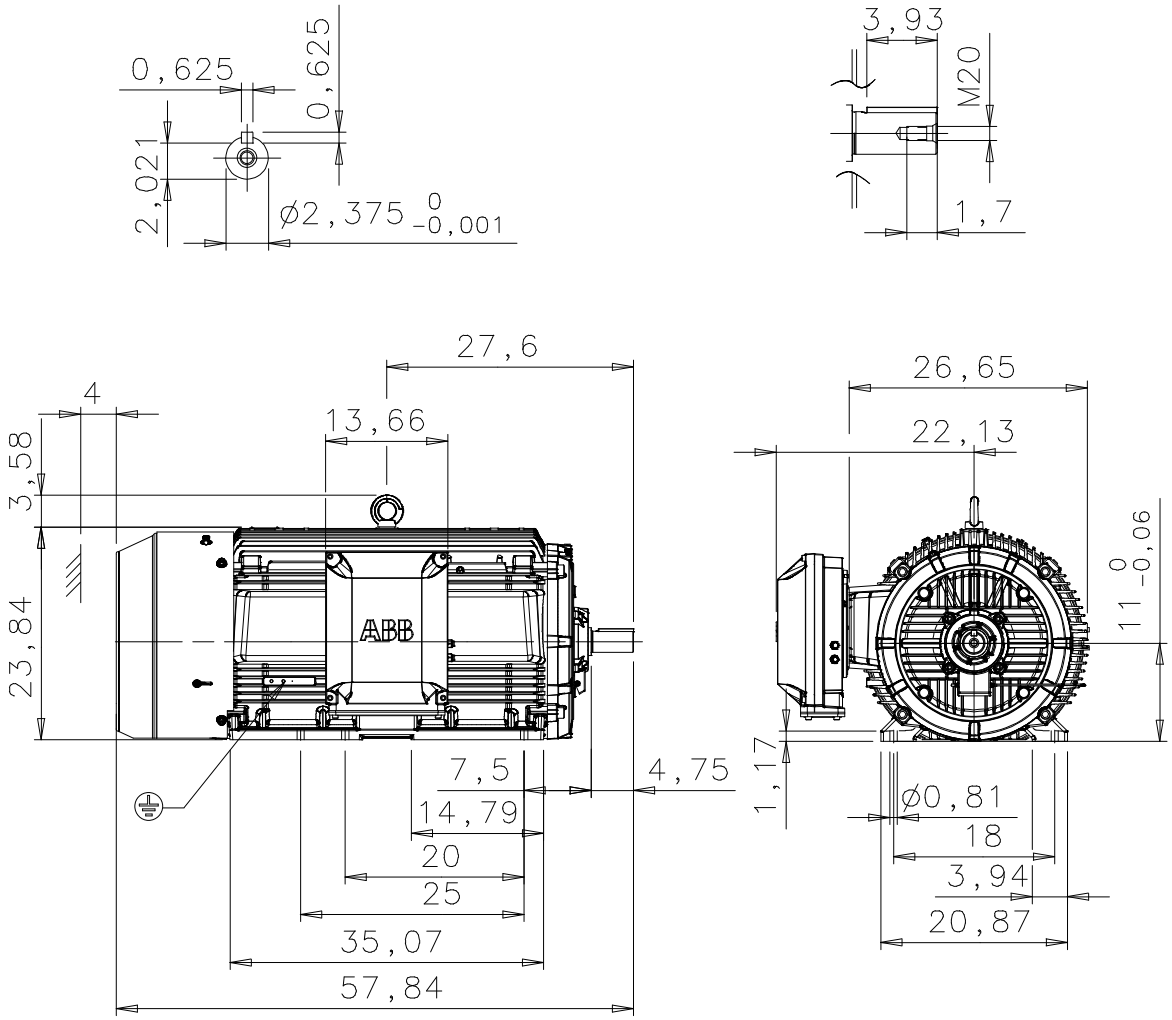

Additional information:

Dimension Print	Motor Type: M3BN 449KH_ 2 B3 V5 V6 B6 B7 B8	Document No: 3GZF500084-21 A 13 BN 449 A
Description:	STANDARD SQUIRREL CAGE MOTOR, TERMINAL BOX LHS DIMENSIONS IN INCHES, MOTOR SIZES 447 AND 449	

Unit:	Motors	Issued by:	B.Lillsjö.	Replaces:
Date:	09.12.2005	Approved by:	J.Rantamäki	Replaced by:

ABB Oy	Customer Reference:	ABB