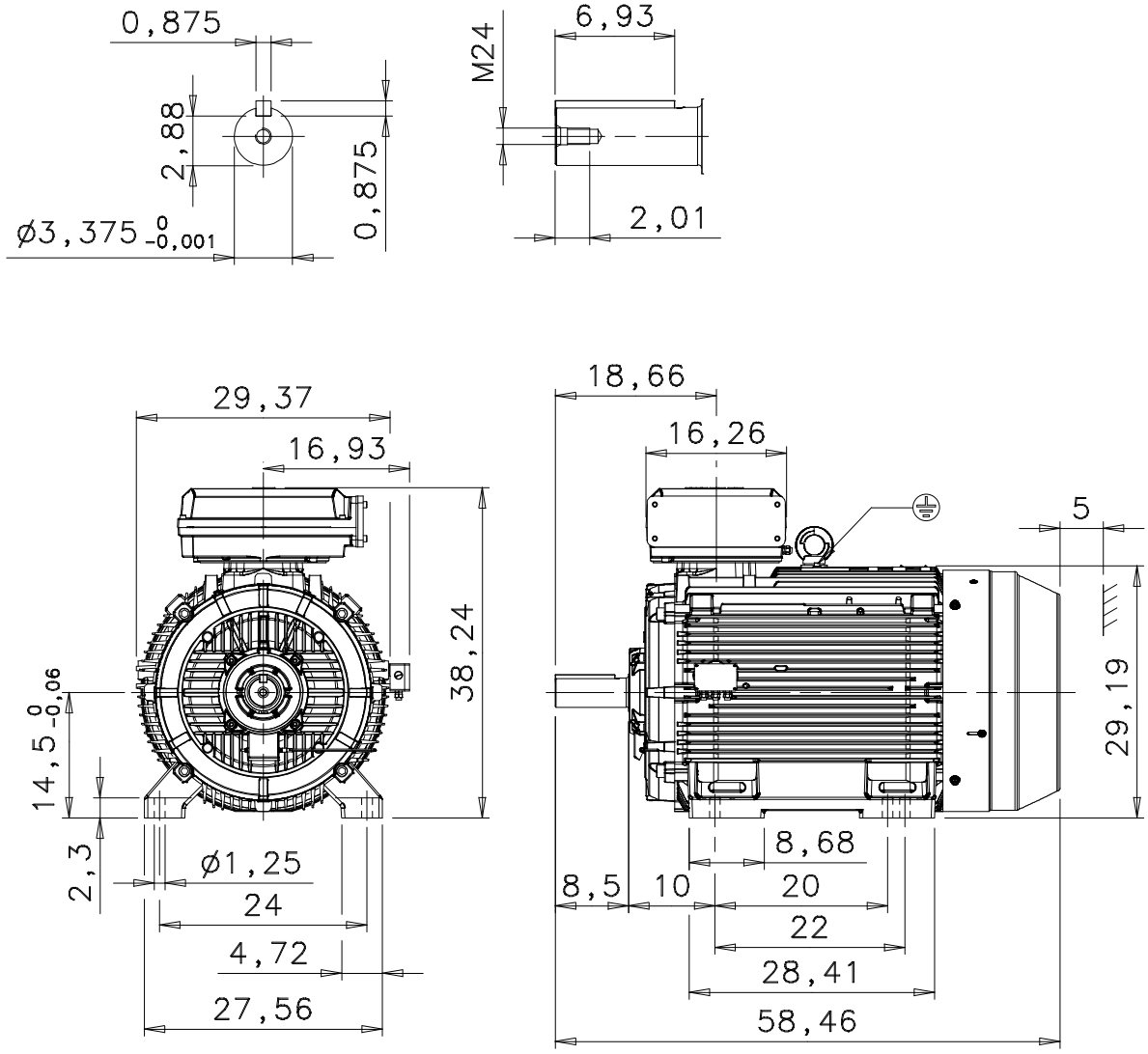

Additional information:

Dimension Print	Motor Type: M3BN 586SM_4.. B3, B6, B7, B8, V5, V6	Document No: 3GZF500098-87 A 14 BN 586 A
Description:	SQUIRREL CAGE MOTOR WITH AUXILIARY TERMINAL BOX DIMENSIONS IN INCHES, MOTOR SIZES 585 AND 586	

Unit:	Motors	Issued by:	J.Rissanen	Replaces:	
Date:	28.07.2007	Approved by:	J.Vuorinen	Replaced by:	

ABB Oy	Customer Reference:	ABB