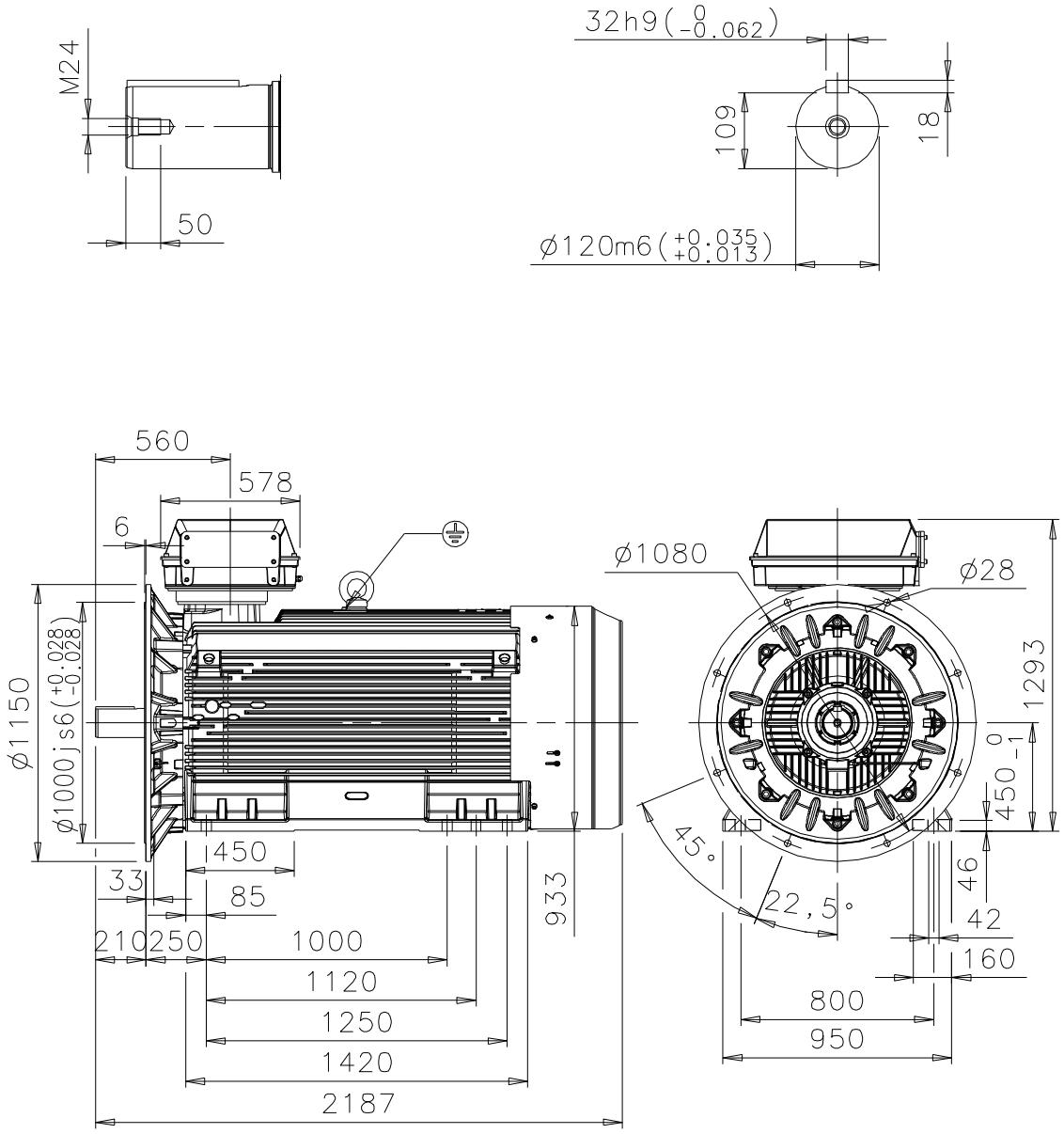


Additional information:

| | | |
|---|---|---|
| **Dimension Print** | Motor Type:<br>M3BP 450L_4-12 B35<br>M3HP/GP 450L_4-12 B35 | Document No:<br>3GZF500045-6 C<br>13 BP 450 A |
| Description: STANDARD SQUIRREL CAGE MOTOR, TERMINAL BOX 1200 | | |

| | | | | |
|---|---|---|---|---|
| Unit: | Motors | Issued by: | M.Alizadeh | Replaces: |
| Date: | 20.05.2010 | Approved by: | M.Sevola | Replaced by: |

| | | |
|---|---|---|
| **ABB Oy** | Customer Reference: | ABB |