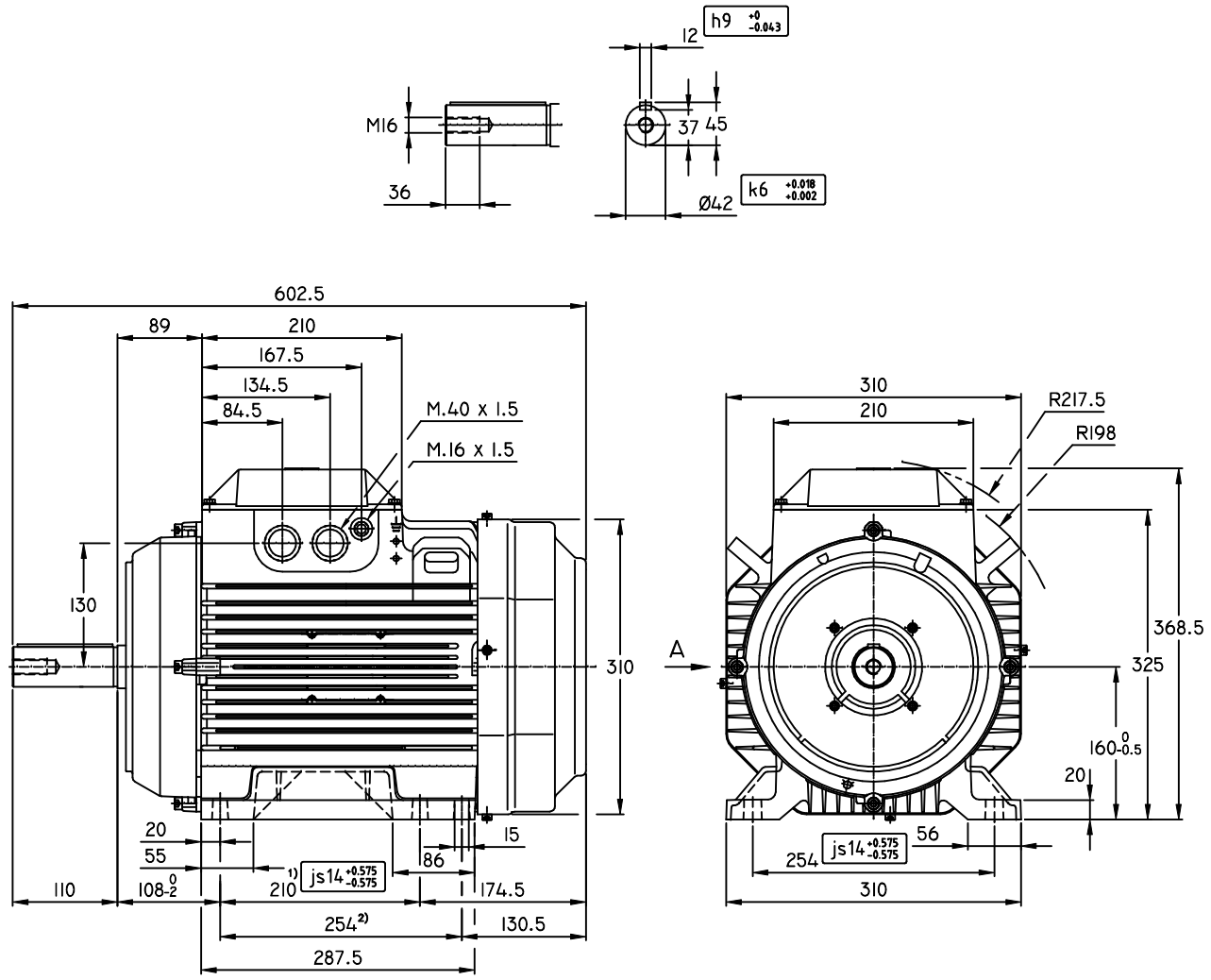

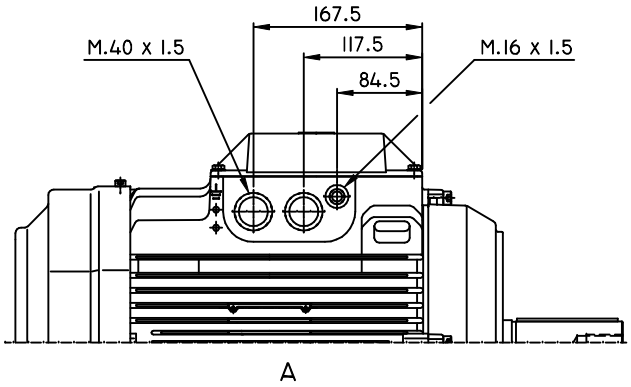

M3AA 160

(*) M-2, MA-2, M-4, M-6, M-8, MA-8, L-2, L-4, L-6, MA-2/4, M-2/4, L-2/4, M-4/6, M-4/8, LB-2, LB-4

1) M3AA 160 L	Not acc. to IEC. No corresponde a IEC.
2) M3AA 160 M	Not acc. to IEC. No corresponde a IEC.

Motor Dimension Print	Motor Type : M3AA 160 (*)	Document N° : AE 4431 5138-501
Description : Motor foot mounted IM 1001 / Motor con patas IM 1001		
Unit : ABB Motores, S.A , Spain Date : 2001-03-26	Issued by : IKA/ J.MUÑOZ Approved by : IKA/ R.PERERA	Replaces : to date 1998-01-12 Replaced by :
ABB Motors	Customer Reference :	ABB