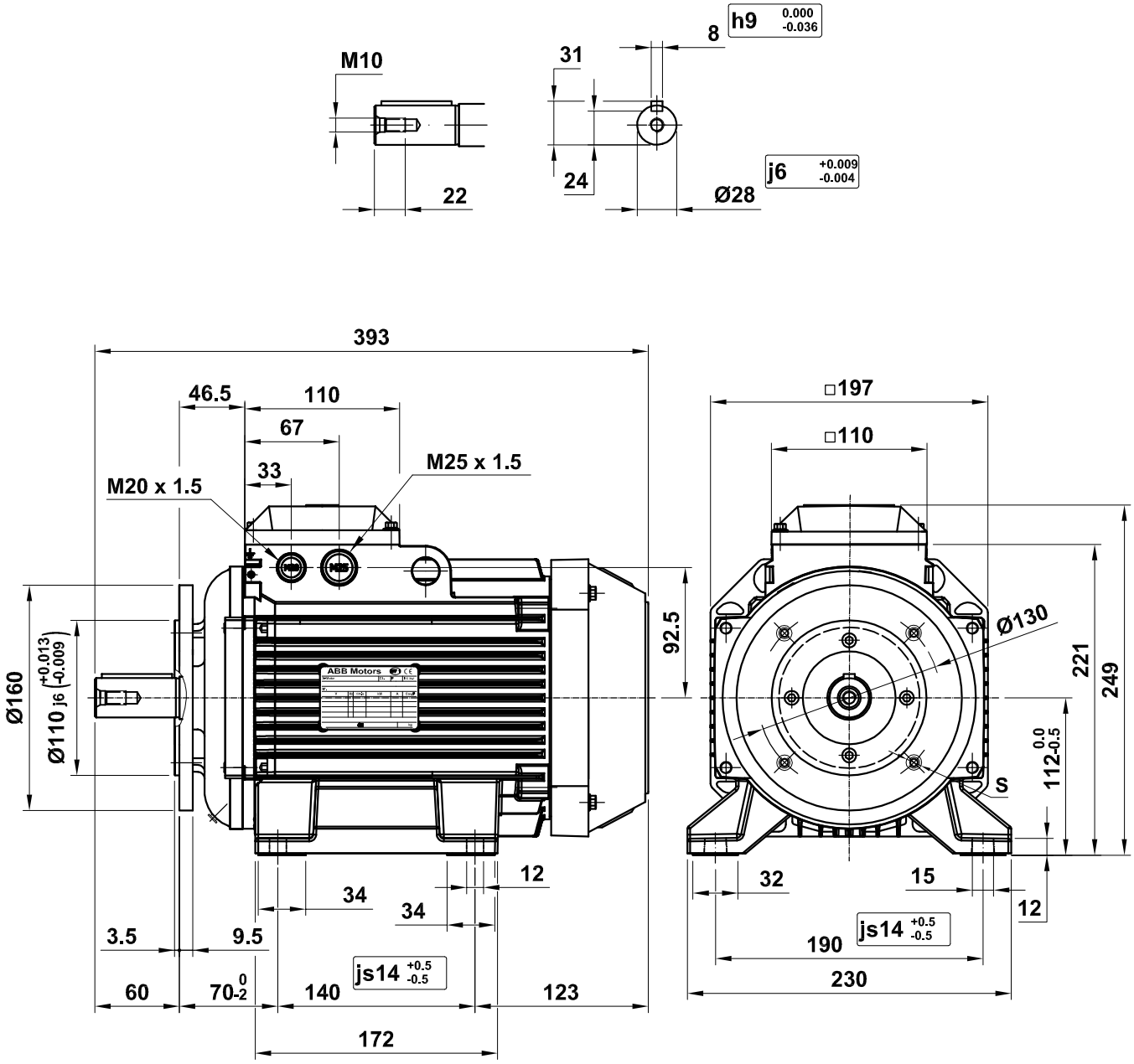

S = { Ø11 – Special IM 2001 / M8 – Special IM 2101 }

M2(3)AA 112

Motor Dimension Print	Motor Type : M2(3)AA 112 IM-B34 FF(T)-130	Document N° : A1.4939

Description :
Motor foot and flange mounted special (2-pieces) IM2001 or IM2101

Unit : Automation Products - Fábrica Motores	Issued by : EMD/ G.Gállego	Replaces :
Date : 2008-05-13	Approved by : EMD/ G.Blanes	Replaced by :
Asea Brown Boveri, S.A.	Customer Reference :	ABB